TOWN OF CASTLE ROCK, COLORADO

CONSTRUCTION CONTRACT

THIS CONSTRUCTION CONTRACT (Contract) is made at the Town of Castle Rock, Colorado, between the Town of Castle Rock, Colorado (Town), a municipal corporation, 100 N. Wilcox Street, Castle Rock, Colorado 80104 and Moltz Construction, Inc. (Contractor) a Colorado corporation, 8807 C.R. 175, P.O. Box 729, Salida, CO 81201.

In consideration of these mutual covenants and conditions, the Town and Contractor agree as follows:

SCOPE OF WORK The Contractor shall execute the entire Work described in the Contract.

CONTRACT The Contract represents the entire and integrated agreement between the parties hereto and supersedes prior negotiations, written or oral representations and agreements. The Contract incorporates the following Contract Documents. In resolving inconsistencies among two or more of the Contract Documents, precedence will be given in the same order as enumerated.

LIST OF CONTRACT DOCUMENTS

The Contract Documents, except for Modifications issued after execution of this Agreement, are:

1. Change Orders;
2. Notice to Proceed;
3. Construction Contract;
4. The following Addenda, if any:
5. Town of Castle Rock General Conditions dated, "TA Rev" July 9, 2015

6. Special Conditions of the Contract:

7. The following Specifications:
    A. Plum Creek Water Purification Facility (PCWPF), Work Package No. 2, Project Manual, Issue for Construction, Dated February, 2012 by Burns & McDonnell Engineering. More specifically, the following specification sections apply: 01330 – Submittals, 01400 – Quality Requirements, 01750 – Manufacturers Field Service, 01780 – Contract Closeout, 01785 – Warranties, 03151 – Concrete Anchors, 05125 – Pipe Supports, 09900 – Protective Coatings, 10445 – Identification of Piping and Valves with Markers and Tags, 11205 – Interior Pipe, 11206 – Pipe Installation, 13219 – Cleaning and Disinfection of Water Treatment Plant (new work), 16010 – Basic Electrical Requirements, 16110 – Raceways, 16120 – Wires and Cables, 16135 – Electrical Boxes and Fittings.

8. The following Drawings:
   A. PCWPF Contract Drawings, Conforming to Construction Records, Dated July, 2013 by Burns & McDonnell Engineering. More specifically, all drawing pages that reference the Pall membrane treatment system.

8. Notice of Award;
9. Invitation to Bid;
10. Information and Instructions to Bidders;
11. Notice of Substantial Completion;
12. Notice of Construction Completion;
13. Proposal Forms, including Bid Schedules;
14. Performance, and Labor and Material Payment Bonds;
15. Performance Guarantee; and
16. Insurance Certificates.

CONTRACT PRICE. The Town shall pay the Contractor for performing the Work and the completion of the Project according to the Contract, subject to Change Orders as approved in writing by the Town, under the guidelines in the General Conditions. The Town will pay $990,000 DOLLARS, (Contract Price), to the Contractor, subject to full and satisfactory performance of the terms and conditions of the Contract. The Contract Price is provisional based on the quantities contained in the Proposal attached as ***Exhibit 1***. The final Contract Price shall be adjusted to reflect actual quantities incorporated into the Work at the specified unit prices. The Town has appropriated money equal or in excess of the Contract Price for this work.

COMPLETION OF WORK. The Contractor must begin work covered by the Contract within 14 calendar days, and must complete work within 175-working days from and including the date of Notice to Proceed, according to the General Conditions. The Work should be completed by May 31, 2017.

LIQUIDATED DAMAGES. If the Contractor fails to substantially complete the Work by the date set for substantial completion in the Contract, or if the completion date is extended by a Change Order, by the date set in the Change Order, the Town may permit the Contractor to proceed, and in such case, may deduct the sum of $500 for each day that the Work shall remain uncompleted from monies due or that may become due the Contractor. This sum is not a penalty but is a reasonable estimate of liquidated damages.

The parties agree that, under all of the circumstances, the daily basis and the amount set for liquidated damages is a reasonable and equitable estimate of all the Town's actual damages for delay. The Town expends additional personnel effort in administering the Contract or portions of the Work that are not completed on time, and has the cost of field and office engineering, inspecting, and interest on financing and such efforts and the costs thereof are impossible to accurately compute. In addition, some, if not all, citizens of Castle Rock incur personal inconvenience and lose confidence in their government as a result of public projects or parts of them not being completed on time, and the impact and damages, certainly serious in monetary as well as other terms are impossible to measure.

SERVICE OF NOTICES. Notices to the Town are given if sent by registered or certified mail, postage prepaid, to the following address:

TOWN OF CASTLE ROCK
Town Attorney
100 N. Wilcox Street
Castle Rock, CO 80104

INSURANCE PROVISIONS. The Contractor must not begin any work until the Contractor obtains, at the Contractor's own expense, all required insurance as specified in the General Conditions. Such insurance must have the approval of the Town of Castle Rock as to limits, form and amount.

RESPONSIBILITY FOR DAMAGE CLAIMS. The Contractor shall indemnify, save harmless, and defend the Town, its officers and employees, from and in all suits, actions or claims of any character brought because of: any injuries or damage received or sustained by any person, persons or property because of operations for the Town under the Contract; including but not limited to claims or amounts recovered from any infringements of patent, trademark, or copyright; or pollution or environmental liability. The Town may retain so much of the money due the Contractor under the Contract, as the Town considers necessary for such purpose. If no money is due, the Contractor's Surety may be held until such suits, actions, claims for injuries or damages have been settled. Money due the Contractor will not be withheld when the Contractor produces satisfactory evidence that the Contractor and the Town are adequately protected by public liability and property damage insurance.

The Contractor also agrees to pay the Town all expenses, including attorney's fees, incurred to enforce this Responsibility for Damage Claim clause.

Nothing in the **INSURANCE PROVISIONS of the General Conditions** shall limit the Contractor's responsibility for payment of claims, liabilities, damages, fines, penalties, and costs resulting from its performance or nonperformance under the Contract.

STATUS OF CONTRACTOR. The Contractor is performing all work under the Contract as an independent Contractor and not as an agent or employee of the Town. No employee or official of the Town will supervise the Contractor. The Contractor will not supervise any employee or official of the Town. The Contractor shall not represent that it is an employee or agent of the Town in any capacity. **The Contractor and its employees are not entitled to Town Workers' Compensation benefits and are solely responsible for federal and state income tax on money earned.** This is not an exclusive contract.

THIRD PARTY BENEFICIARIES. None of the terms or conditions in the Contract shall give or allow any claim, benefit, or right of action by any third person not a party to the Contract. Any person, except the Town or the Contractor, receiving services or benefits under the Contract is an incidental beneficiary only.

INTEGRATION. This contract integrates the entire understanding of the parties with respect to the matters set forth. No representations, agreements, covenants, warranties, or certifications, express or implied, shall exist as between the parties, except as specifically set forth in this Contract.

DEFINITIONS. The Definitions in the General Conditions apply to the entire Contract unless modified within a Contract Document.

Executed this _____ day of _____, 2016.

ATTEST: **TOWN OF CASTLE ROCK**

_____ _____

Sally A. Misare, Town Clerk Paul Donahue, Mayor

APPROVED AS TO FORM:

_____

Robert J. Slentz, Town Attorney

CONTRACTOR:

Moltz Construction, Inc.

By: _____

Title: _____

(*Insert either the Corporate or Partnership Certificate, as appropriate)*

EXHIBIT 1
(PROPOSAL/BID)

Moltz Construction Inc.
General Contractor/Construction Manager

8807 CR 175
P.O. Box 729
Salida, CO 81201
Phone: (719)539-7319
Fax: (719)539-7695

August 26, 2016

Walt Schwarz, Project Manager
Castle Rock Utilities Department
175 Kellogg Street
Castle Rock, CO 80109

Re: Castle Rock – Plum Creek WTF Membrane System Expansion Project

Mr. Schwarz:

We are pleased to offer this proposal to furnish and install the fourth PALL membrane system to be added at the Plum Creek WTF. Moltz Construction will provide the PALL membrane equipment per the attached proposal, and all civil, structural, mechanical and electrical (plant I&C integration is by others) work for a complete and workable membrane system. A one-year warranty on material and workmanship, and PALL standard warranty is included per the attached PALL scope of supply to be transferred to the Owner after 1 year. The added Membrane system can be commissioned and available to treat blended source water from Plum Creek in May 2017. This scope of work includes concrete, grout, anchorage, pipe supports, process piping and isolation valves, protective coatings, electrical work specific to the added membrane rack only, furnish and install PALL Membrane equipment including skid assembly, valves, cabling and startup support for the Castle Rock Membrane System Expansion project for the lump sum price of: **$990,000.00. (Nine Hundred Ninety Thousand Dollars and No Cents).**

Cost Breakdown:

General Conditions, Equipment, Permit, Bonds and Insurance	$68,000.00
Pipe Supports, Anchorage	$28,225.00
Protective Coatings and Pipe / Valve Tagging	$10,500.00
Procure Membrane System	$741,350.00
Unload, Protect, Install, Commission Membrane System	$52,300.00
Interior Pipe	$70,725.00
Electrical Sub	$18,900.00
TOTAL	$990,000.00

The pricing above does not include any costs for furnishing or installation of one additional Pre-Filtration Strainer, or furnishing or installation of one additional Air Compressor and is not included in this scope of work.

The material provided for this project will be fabricated and installed as applicable, per the following sections of the project manual for the Town of Castle Rock, Colorado Plum Creek Water Purification Facility, Work Package No. 2 – Issue for Construction:

i. 01330 Submittals

ii. 01400 Quality Requirements
iii. 01750 Manufacturers Field Service
iv. 01780 Contract Closeout
v. 01785 Warranties
vi. 03151 Concrete Anchors
vii. 05125 Pipe Supports
viii. 09900 Protective Coatings
ix. 10445 Identification of Piping and Valves with Markers and Tags
x. 11205 Interior Pipe
xi. 11206 Pipe Installation
xii. 13219 Cleaning and Disinfection of Water Treatment Plant (new work)
xiii. 16010 Basic Electrical Requirements
xiv. 16110 Raceways
xv. 16120 Wires and Cables
xvi. 16135 Electrical Boxes and Fittings

Should you have any questions regarding this proposal, please feel free to contact me.

Sincerely,

Toby Reid
Project Manager

Pall Corporation
Proposal

ARIA™ Membrane Filtration System

Town of Castle Rock, CO Expansion

Date: August 26, 2016
Revision: 2
Author: Rick Moro

Submitted to:
Moltz Construction
Attention: Toby Reid
P.O. Box 729
8807 County Road 175
Salida, CO 81201
(719) 539-7319

Submitted by:
Rick Moro
Regional Sales Manager
Pall Corporation
25 Harbor Park Drive
Port Washington, NY 11050
rick_moro@pall.com
(516) 924-2054

PROPRIETARY & CONFIDENTIAL

INFORMATION NOTICE

This proposal document is proprietary to Pall Corporation and is furnished in confidence solely for use in evaluating the proposal and for no other direct or indirect use. No rights are granted to the recipient for any information disclosed in this proposal. It contains proprietary information which may be the subject of an issued patent or pending application in the United States or elsewhere.

By accepting this document from Pall Corporation the recipient agrees:

- to use this document and the information it contains exclusively for the above-stated purpose and to avoid use of the information for performance of the proposed work by recipient itself or any third party.
- to avoid publication or other disclosure of this document or the information it contains to any third party without the prior approval of Pall Corporation.
- to make only those copies needed for recipient's internal review, and
- to return this document and any copies thereof when they are no longer needed for the purpose for which furnished or upon the request of Pall Corporation.

Pall Corporation Revision History

Revision	Date	Originator	Description
00	7/14/2016	Pall Corporation	Initial Document Release.
01	8/12/2016	Pall Corporation	Installation scope and schedule revised to reflect direct quote for equipment and engineering services only to Moltz Construction.
02	8/26/2016	Pall Corporation	Updated Sect 2.4 & 3 to incorporate parts of the previous contract with Town of CR. New payment milestones, and added both commercial and technical E&C's.

Table of Contents

1. Solution Summary

2. Pall Offering
    - 2.1 Scope Summary
    - 2.2 Pricing Summary
    - 2.3 Delivery Schedule
    - 2.4 Terms and Conditions

3. Scope of Supply
    - 3.1 Scope Summary Table
    - 3.2 Equipment Description
    - 3.3 Submittal Description
    - 3.4 Post-Installation Services and Labor

4. Technical Summary
    - 4.1 Process Summary
    - 4.2 Treated Water Objectives
    - 4.3 Operational Parameters
    - 4.4 Acceptance Criteria

5. Warranty

Attachment A – Drawings

Attachment B – Technical Exceptions and Clarifications

Attachment C – Commercial Exceptions and Clarifications

1. Solution Summary

Pall Corporation would like to thank the Town of Castle Rock, Colorado, in conjunction with Moltz Construction, for their continued interest in our membrane based filtration/separation products. It is our firm belief that our products will provide the level of satisfaction that your water treatment application demands.

As requested, Pall is proposing the addition of one hollow fiber membrane system rack and ancillary equipment in order to expand the water treatment plant's capacity.

Once you have had sufficient time to review our offering, please direct any questions you may have to our team members.

2. Pall Offering

2.1 Scope Summary

Pall Corporation proposes to expand the existing Hollow Fiber Membrane System equipment including the membrane rack, compressor, and strainer to be procured and constructed by Pall in our factory.

2.2 Pricing Summary

Item	Description	Sale Price
1	Supply and commissioning of one (1) additional membrane rack including upgrades to the HMI and control system as described in Section 3 of this proposal.	$673,540
2	Supply, and start-up/commissioning of one (1) additional pre-filtration strainer as described in Section 3 of this proposal.	$18,790
3	Supply, and start-up/commissioning of one (1) additional air compressor as described in Section 3 of this proposal.	$32,670
Total for all items proposed		**$725,000**

2.3 Delivery Schedule

Milestone	Expected Schedule
PO/contract received By Pall from Moltz Construction	September 16, 2016
Acknowledgement of PO By Pall	5-10 Days after receipt of PO/Contract
Submittal of documents listed in Section 3	30 days from Pall Acknowledgement of Purchase Order
Submittal Approval	Not later than October 26, 2016
Release to Manufacture	Not later than October 26, 2016
Delivery of Membrane Rack and Revised O&M Manual	18 weeks after Release to Manufacture*

Milestone	Expected Schedule
Installation Completed (By others)	5-6 weeks after equipment delivery**
Commissioning Complete	5 weeks after installation completed**
Final Acceptance	The earlier of completion of system commissioning or 90 days after equipment delivery.

*The lead time for membrane racks is based on supply of module racks with a powder coat finish on the structural steel frame similar to that supplied for the original system. A shorter lead time (approximately 14 weeks from release to manufacture) is possible if rack framework is provided with epoxy paint per Pall Corporation's current standard procedures. Lead time is subject to review and adjustment based on actual shop workload and schedule if release to manufacture occurs later than expected.

** Installation and commissioning completion dates to be confirmed by others and reliant on the Town's ability to tolerate plant shutdowns.

2.4 Terms and Conditions

All sales made by Pall are subject to the terms contained within this Section 2.4, Section 5 Limited Warranty, and the following Sections from the July 11, 2012 TOWN OF CASTLE ROCK UTILITIES DEPARTMENT CASTLE ROCK, COLORADO CONTRACT DOCUMENTS for the purchase of MEMBRANE FILTRATION EQUIPMENT AND SPECIAL SERVICES: 00 52 63 AGREEMENT FORM, 00 72 05 STANDARD GENERAL CONDITIONS FOR PROCUREMENT CONTRACTS and 00 73 05 SUPPLEMENTARY CONDITIONS, as modified by the Pall Commercial Exceptions provided as Attachment C.

Price Validity	Pricing stated is in US Dollars and shall remain valid for 30 days from the date of this proposal.
Shipping Terms	The price includes shipping costs. Delivery shall be FCA Job Site, INCOTERMS® 2010.
Payment Terms	Payment of invoiced amounts due to Seller shall be paid Net 30 days from Seller's invoice.
Payment Milestones	Payments will be made per the following schedule: • 5% of the purchase price upon earlier of (i) Seller being awarded project or (ii) delivery to Seller of the Purchase Order or (iii) the Sales Confirmation;

	• 10% of the purchase price upon Submittal Approval; • 35% of the purchase price upon Release to Fabricate; • 35% of the purchase price upon earlier of (i) Delivery of the Goods; • 10% of the purchase price upon Commissioning and Start-up per Section 3.4 of this proposal and; • 5% upon Final Acceptance per Section 4.4 of this proposal.
Bonds	No bonds of any type are included with this proposal.
Taxes	No taxes are included in the pricing. Payment of all taxes related to the Goods and Services proposed shall be the exclusive responsibility of the Buyer. **Buyer shall submit to Seller a valid sales tax exemption certificate, as applicable.**

3. Scope of Supply

Equipment is provided in compliance with the applicable sections of the equipment and technical sections of the contract documents from the previous project entitled:

TOWN OF CASTLE ROCK UTILITIES DEPARTMENT CASTLE ROCK, COLORADO CONTRACT DOCUMENTS for the purchase of MEMBRANE FILTRATION EQUIPMENT AND SPECIAL SERVICES dated July 12, 2011.

Pall further clarifies that tagging for the expansion will be included as defined by Change Order #1, and Block and Bleed valves will include limit switches as defined in Change Order #2 from the original project.

Pall Corporation has included Technical Exceptions and Clarifications to this document herein.

3.1 Scope Summary Table

Item Description	By PALL	By OTHERS
Design, supply, and installation of all piping required to integrate the new equipment into existing system. Inclusive of feed, filtrate, compressed air, drains, CIP supply and return, and flush water		X
Membrane Feed Pump System (existing)		X
System drawing submittals	X	
Membrane pre-feed strainer with backwash and isolation valves	X	
Membrane valve and module rack with 78 membrane spaces	X	
Membrane modules	X	
Air compressor assembly and outlet isolation valve	X	
Supply of anchor bolts for Pall supplied Equipment		X
Upgraded 17" touch-screen industrial computer with Windows 10 operating System and Factory Talk View SE HMI software	X	
Receiving and unloading of equipment		X
Safe storage of equipment until ready for installation		X
Installation of all equipment including concrete installation pads and grouting		X
Supply of interconnecting pipe, inclusive of pipe supports and flexible connectors		X
Expansion of Motor Control Center (MCC) and motor starter for new strainer		X
All wiring, cabling, and tubing for power supply,		X

Item Description	By PALL	By OTHERS
signals, communications, and to connections on Pall supplied equipment		
Design, supply, and installation of all civil infrastructure inclusive of buildings, fire and safety protection, HVAC, walkways, platforms, etc.		X
Revision to update Operation & Maintenance Manual	X	
Quality Control Inspection of System Installation	X	
On-site start-up support, commissioning, and support during initial system operational testing	X	
All Permits		X

3.2 Equipment Description of Major Components

MF Units

Quantity	1
Type	Transverse Rack Style, HDPE Piping
Size	8 inch - Nominal
Modules per Rack	64
Module spaces per rack	78
Module Part Number	UNA-620A
Customer Connections	ANSI Class B 150 lb Flanges, sizes similar to previously supplied racks.
Operational Limits	0 – 40°C
Frame Finish	Powder coat as supplied on original racks

Feed Strainer

Quantity	1
Strainer removal rating	300 micron
Size	EBS 10000; 14 inch
Motor	1/2 HP, 460V/3PH/60HZ,
Customer Connections	ANSI 150 lb flanges
Manufacturer	Amiad

Air Compressor

Quantity	1
Type	ROTARY SCREW
Cooling	Air Cooled
Capacity	30.1 ACFM @ 175 PSIG
Motor	10 HP, 460V/3PH/60HZ
Manufacturer	Atlas Copco

3.3 Submittal Description

Submittals shall be in electronic format via a secure file transfer application for approval.

Pall Corporation will endeavor to deliver equipment identical to that which was supplied for the original system, but where equipment has been obsoleted or model updates have occurred, approval of similar replacement equipment will be requested with response being within two days and not unreasonably withheld.

Submittal Documents
P&ID (Revised to update from original project)
Membrane Filter Skid/Rack Assembly Drawing
Power Single-Line Diagram/Network Diagram/System Interconnection Details Drawing (Revised to update from original project)
Valve Rack Panel
Instrument List and Supporting Vendor Information (catalog cut sheets)
Equipment List and Supporting Vendor Information (catalog cut sheets)
Valve List and Supporting Vendor Information (catalog cut sheets)

Final Document Submittal (with rack shipment)
Operation and Maintenance Manual

3.4 Post-Installation Services and Labor

Commissioning and Start-up

This proposal includes on-site services of a Field Service Engineer for up to 20 days on-site in up to 4 trips to commission the system and assure expected performance for capacity and effluent quality (turbidity and acceptable integrity test performance.) This includes time to update the existing control system to accommodate the increased flow rate of the system and to control and monitor the equipment supplied by Pall Corporation as proposed herein.

Operator Training

No operator training is included in the scope of this proposal.

Performance Testing

No additional on-site time beyond standard commissioning and start-up with capacity checks has been included in the scope of this proposal.

4. Technical Summary

4.1 Process Summary

Source Description

Raw water is obtained from alluvial wells along East Plum Creek. Deep aquifer water may be mixed with the alluvial well water.

Treatment Processes Prior to Membrane Filtration

Raw water will be pre-oxidized with up to 3.0 mg/L of potassium permanganate prior to a minimum of 45 minutes of flocculation and settling using 15 to 60 mg/L of ferric chloride.

The flocculated water may be dosed with up to 0.5 mg/L of high molecular weight, low charge, anionic polymer, solutioned from dry polymer. The flocculated water may also be dosed with lime and carbon dioxide for pH adjustment.

If polymer is used upstream of the membranes, it will be acceptable to re-optimize CW frequency and formulation outside of what is specified herein.

Unthickened solids from the clarifier will be treated on-site with up to 5.0 mg/L of high molecular weight, low charge, anionic polymer, solutioned from dry polymer and fed to the gravity thickener.

Decant from gravity thickener and all backwash waste will be recycled to the head of the water treatment plant, prior to pre-oxidation and clarification.

Membrane Filtration Feed Water Characteristics

Quality of the water entering the Pall Membrane System, as summarized in table below, forms the basis of design for this proposal. In the event that the feed water to the membrane filtration system is outside these parameters, the system performance, cleaning protocol, operating parameters, and/or warranties may be affected.

Parameter	Units	10th Percentile	Avg	90th percentile	Notes
Alkalinity	ppm as $CaCO_3$	30	50	120	
Chloride	mg/l	80	100	160	
Fats, Oils, Grease (FOG)	mg/L			0	Assumed
Hardness, Total	ppm as $CaCO_3$	90	110	200	
Hydrocarbons	mg/L			0	Assumed
Iron, dissolved (Fe)	mg/L	0.05	0.1	0.4	
Manganese, dissolved (Mn^{+2})	mg/L	0.03	0.15	0.20	
Organic Carbon, Total (TOC)	mg/L	1.0	2.5	5.0	
pH		5.8	6.1	7.0	
Potassium Permanganate (KMnO4) residual	mg/L	0.0	0.1	0.5	
Temperature	°C	5	10	20	
Total Dissolved Solids (TDS)	mg/L	300	350	450	
Turbidity	NTU	1.0	5.0	12.0	

4.2 Treated Water Objectives

The proposed membrane system is designed to achieve the following results given the feed fluid conditions described in Section 4.1 of this proposal and operation of the system in accordance with the Operation and Maintenance Manual.

Additional Net Filtrate Capacity of 2.0 MGD (6.0 MGD Total system capacity, 3 racks on-line)

Turbidity less than 0.10 NTU 95% of the time, below 0.30 NTU at all times.

LRV = 4.0 in accordance with US EPA Membrane Filtration Guidance manual.

4.3 Operational Parameters

Membrane Filtration System Operational Parameters at Design Flow:

Net Filtrate Capacity	2.0	MGD
Recovery	97.6	%
Instantaneous Flux	65	GFD max
FM (Backwash) Interval	36,800	Gal of filtrate produced/Rack
EFM (Acid) Interval	7	Days
CIP Interval	45	Days

4.4 Final Acceptance Criteria

The system shall be accepted by the end user upon completion of all of the following:

1) Completed System Commissioning

In the event that item 1 is incomplete 90 days after system delivery, the system shall be deemed accepted unless the delays in completion of item 1 above is solely caused by Pall Corporation, or equipment provided by Pall Corporation.

5. Limited Warranty

Seller warrants to Buyer that the title to the goods conveyed shall be proper, its transfer rightful, and free from any security interest, lien, or other encumbrance upon delivery. Seller shall defend, indemnify, and hold Buyer harmless against any liens, claims, or demands to the extent caused by a breach of the foregoing warranty.

5.1 Limited Hardware Warranty:

Seller warrants to Buyer that for a period of twelve months commencing from the date of start-up or eighteen months from time of delivery from Seller, whichever is sooner, (the "**Warranty Period**"), that the goods manufactured by Seller, when properly installed and maintained, and operated at ratings, specifications and design conditions specified by Seller, will meet Seller's specifications for such goods and will be free from material defects in material and workmanship (this "**Limited Warranty**").
If the defects are of such type and nature as to be covered by this Limited Warranty, Seller shall, at its option and in its sole discretion, either:

a. accept return of the defective goods and furnish a replacement goods; or
b. furnish replacement parts for the defective goods; or
c. repair the defective goods; or
d. accept return of the defective goods and return payments made, or issue credits for, such defective goods.

5.2 Limited Module Warranty

(10 YEAR: 1 YEAR ABSOLUTE AND 9 YEARS PRO-RATED)

a. In addition to the foregoing, for a period of 120 months commencing from the date of the startup, or 126 months from the date of delivery from Seller (the "**Module Warranty Period**"), whichever is sooner, Seller warrants that the membrane modules, when properly installed, maintained, and operated at ratings, specifications, and conditions specified by the Contract documents and Seller's Operations and Maintenance Manual ("**O&M Manual**"), will be free from defects in material and workmanship.
b. Owner and Seller will work together to optimize the specific operating protocol to be used including number of racks on line, flow rates per rack, cleaning technique and cleaning set points with the goal of achieving excellent long-term performance. Any change in operational conditions, including feedwater chemistry or contaminants will require Seller's review to determine the potential impact on this warranty.

c. If the membrane modules fail to perform as outlined by the Contract documents during the first 12 months of the Module Warranty Period, Seller will be given the opportunity to remedy the situation, by modifying operating and/or cleaning protocol. If Seller is not able to remedy the situation, Seller will repair or replace those modules that do not perform if they are removed from service due to poor performance.

d. If the membrane modules fail to perform as outlined by the Contract documents after the first 12 months of the Module Warranty Period through the end of the Module Warranty Period, Seller will be given the opportunity to remedy the situation, by modifying operating and/or cleaning protocol. If Seller is not able to remedy the situation or repair the modules, Seller will replace those modules at the following replacement price:

Replacement Module Price = Seller's current module price * (# of months from startup / 120 months)
Or
Replacement Module Price = Seller's current module price * ((# of months from delivery – 6) / 120 months))

e. Seller is committed to continuous development of its filters and filter processes. Should membrane technology improve, for example via changes in the permeability or operating flux rates of the membranes, Seller reserves the right to provide a suitable number of alternative membrane replacements during the term of our warranty and beyond.

f. Buyer is required to contract Seller to perform one clean-in-place ("**CIP**") annually to maintain this Limited Module Warranty validity. In addition, CIP's must be conducted by the Buyer at the interval and conditions stated in Seller's **O&M Manual** or as may be modified as stated herein this Limited Module Warranty.

g. Seller's liability under this Limited Membrane Warranty is limited solely (in Seller's discretion) to replacing (FCA original shipping point), repairing or issuing credit for products that become defective during the Module Warranty Period.

5.3 Limited Warranty for Services

Seller further warrants that the services, if any, will be performed in a workmanlike manner in accordance with applicable law and industry standards by qualified personnel (this "**Limited Warranty for Services**"); this Limited Warranty for Services shall survive for 30 days following Seller's completion of the services (the "**Service Warranty Period**"). In the event of a warranty claim under this Limited Warranty for Services, Buyer shall inform Seller promptly in writing of the details of the claim within the Service Warranty Period. Seller's liability under any service warranty is limited (in

Seller's sole discretion) to repeating the service that during the Service Warranty Period does not meet this Limited Warranty for Services or issuing credit for the nonconforming portions of the services. If Seller determines that any warranty claim is not, in fact, covered by the foregoing Limited Warranty for Services, Buyer shall pay Seller its then customary charges for all services performed by Seller.

5.4 Other Limits

Seller's warranty hereunder excludes, and in no event shall Seller be liable for, defects or damage arising out of or caused by:

a. abuse, improper modification, improper maintenance, improper installation, or improper operation by persons other than Seller; or
b. corrosion including microbial-induced corrosion, chemical attack, unless corrosive or damaging conditions were disclosed by Buyer and the contract documents require the goods to withstand such conditions; or
c. use in a manner contrary to Seller's written instructions or negligence of persons other than Seller; or
d. damage or adverse effects caused by processes or operational events external to Seller's supplied equipment or outside of Seller's control including hydraulic shock (water-hammer); or
e. foreign debris including particulate matter not typical of the expected process fluid or feed source(s), or debris originating from components or processes not supplied by nor identified to Seller; or
f. influences from catastrophic accidents including those that negatively affect the process fluid's quality, installation integrity, or site utilities.

In no event shall Seller be liable for any goods repaired or altered by someone other than Seller except as authorized in writing by Seller.

5.5 Notification

Buyer shall promptly notify Seller of any breach of Seller's warranties within the applicable Warranty Period and provide Seller with an opportunity to inspect and test the goods or services claimed to fail to meet the above Limited Warranties. Buyer shall provide Seller with a copy of the original invoice for the product or service, and prepay all freight charges to return any goods (or parts thereof) to Seller's factory, or other facility designated by Seller. All claims must be accompanied by full particulars, including operating conditions, if applicable. If Seller determines that any warranty claim is not, in fact, covered by the foregoing Limited Warranties, Buyer shall pay Seller its then customary charges for any additionally required service or products.

5.6 Exclusive Obligations

THIS WARRANTY IS EXCLUSIVE. THE LIMITED WARRANTY AND THE LIMITED WARRANTY FOR SERVICES ARE THE SOLE AND EXCLUSIVE OBLIGATIONS OF SELLER WITH RESPECT TO THE DEFECTIVE GOODS AND SERVICES. SELLER SHALL NOT HAVE ANY OTHER OBLIGATION WITH RESPECT TO THE GOODS, SERVICES, OR ANY PART THEREOF, WHETHER BASED ON CONTRACT, TORT, STRICT LIABILITY, OR OTHERWISE. THE REMEDIES SET FORTH ABOVE SHALL BE THE BUYER'S SOLE AND EXCLUSIVE REMEDY AND SELLER'S ENTIRE LIABILITY FOR ANY BREACH OF THE LIMITED WARRANTY SET FORTH HEREIN EXCEPT FOR THE WARRANTIES SET FORTH IN THIS SECTION, SELLER MAKES NO WARRANTY WHATSOEVER WITH RESPECT TO THE GOODS AND SERVICES, INCLUDING WITHOUT LIMITATION ANY (a) WARRANTY OF MERCHANTABILITY; (b) WARRANTY OF FITNESS FOR A PARTICULAR PURPOSE; (c) WARRANTY OF TITLE; OR (d) WARRANTY AGAINST INFRINGEMENT OF INTELLECTUAL PROPERTY RIGHTS OF A THIRD PARTY; WHETHER EXPRESS OR IMPLIED BY LAW, COURSE OF DEALING, COURSE OF PERFORMANCE, USAGE OF TRADE OR OTHERWISE.

5.7 Buyer Breach

In no event shall Buyer be entitled to claim under the above Limited Warranties if Buyer is in breach of its obligations, including but not limited to payment, hereunder.

Attachment A – Drawings

PRELIMINARY
NOT FOR CONSTRUCTION USE

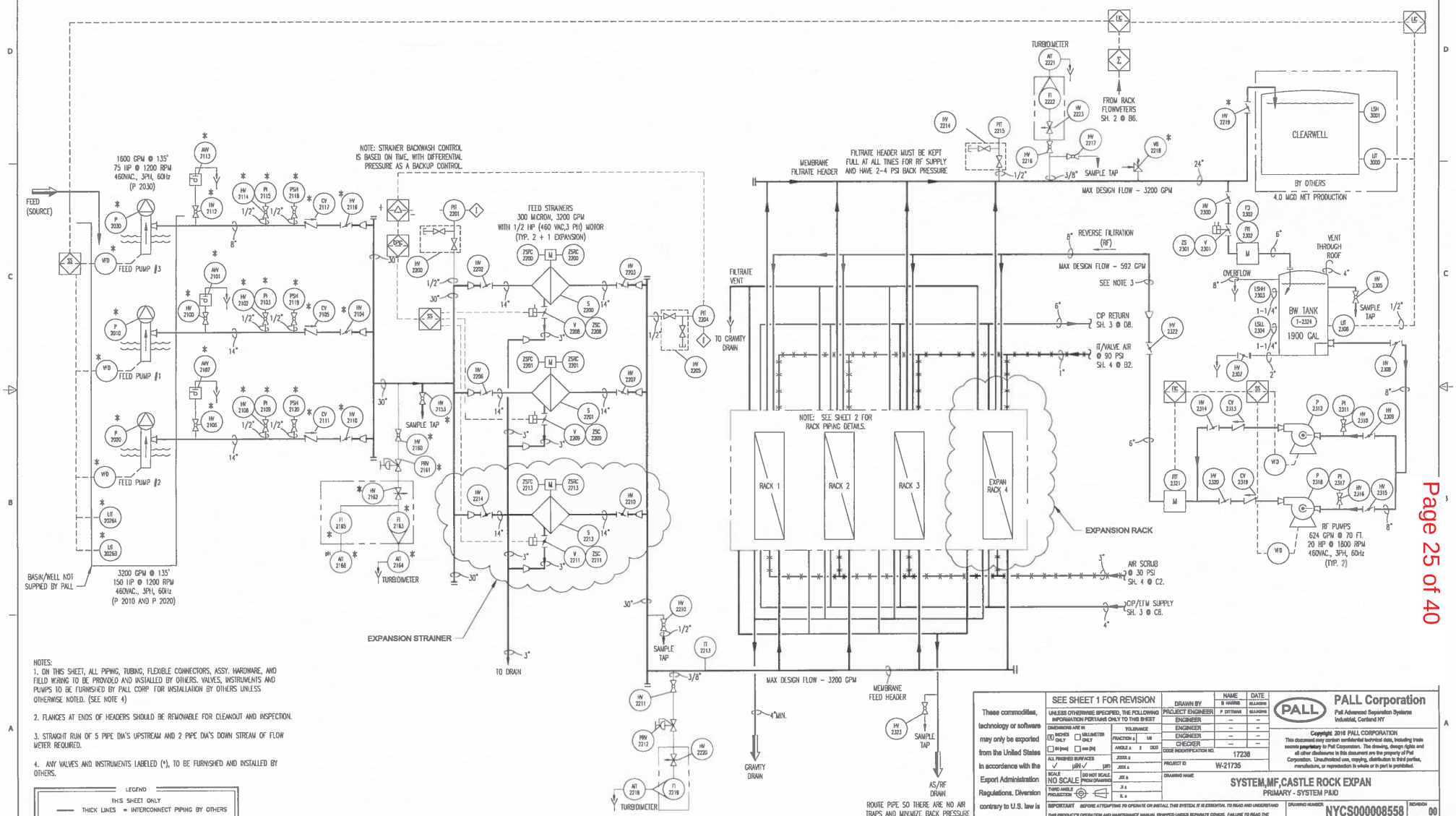

NOTES:
1. ON THIS SHEET, ALL PIPING, TUBING, FLEXIBLE CONNECTORS, ASSY. HARDWARE, AND FIELD WIRING TO BE PROVIDED AND INSTALLED BY OTHERS. VALVES, INSTRUMENTS AND PUMPS TO BE FURNISHED BY PALL CORP FOR INSTALLATION BY OTHERS UNLESS OTHERWISE NOTED. (SEE NOTE 4)

2. FLANGES AT ENDS OF HEADERS SHOULD BE REMOVABLE FOR CLEANOUT AND INSPECTION.

3. STRAIGHT RUN OF 5 PIPE DIA'S UPSTREAM AND 2 PIPE DIA'S DOWN STREAM OF FLOW METER REQUIRED.

4. ANY VALVES AND INSTRUMENTS LABELED (*), TO BE FURNISHED AND INSTALLED BY OTHERS.

LEGEND
THIS SHEET ONLY
THICK LINES = INTERCONNECT PIPING BY OTHERS
THIN LINES = INTERNAL PIPING BY PALL.

These commodities, technology or software may only be exported from the United States in accordance with the Export Administration Regulations. Diversion contrary to U.S. law is prohibited.

SEE SHEET 1 FOR REVISION

UNLESS OTHERWISE SPECIFIED, THE FOLLOWING INFORMATION PERTAINS ONLY TO THIS SHEET

	NAME	DATE
DRAWN BY	B HARRIS	03/24/09
PROJECT ENGINEER	P DITTMAN	03/24/09
ENGINEER	--	--
ENGINEER	--	--
ENGINEER	--	--
CHECKER	--	--

CODE IDENTIFICATION NO. 17238
PROJECT ID W-21735

PALL Corporation
Pall Advanced Separation Systems
Industrial, Cortland NY

Copyright 2010 PALL CORPORATION
This document may contain confidential technical data, including trade secrets proprietary to Pall Corporation. The drawing, design rights and all other disclosures in this document are the property of Pall Corporation. Unauthorized use, copying, distribution to third parties, manufacture, or reproduction in whole or in part is prohibited.

DRAWING NAME: SYSTEM,MF,CASTLE ROCK EXPAN
PRIMARY - SYSTEM P&ID

IMPORTANT BEFORE ATTEMPTING TO OPERATE OR INSTALL THIS SYSTEM, IT IS ESSENTIAL TO READ AND UNDERSTAND THIS PRODUCT'S OPERATION AND MAINTENANCE MANUAL (SHIPPED UNDER SEPARATE COVER). FAILURE TO READ THE OPERATION AND MAINTENANCE MANUAL BEFORE ATTEMPTING TO OPERATE ANY PALL CORPORATION EQUIPMENT MAY RESULT IN SERIOUS PERSONAL INJURY AND/OR PRODUCT DAMAGE, AND VOID ANY AND/OR ALL WARRANTIES

DRAWING NUMBER NYCS000008558 REVISION 00
MATERIAL MASTER — DWG SIZE D SHEET 1 OF 6

PRELIMINARY
NOT FOR CONSTRUCTION USE

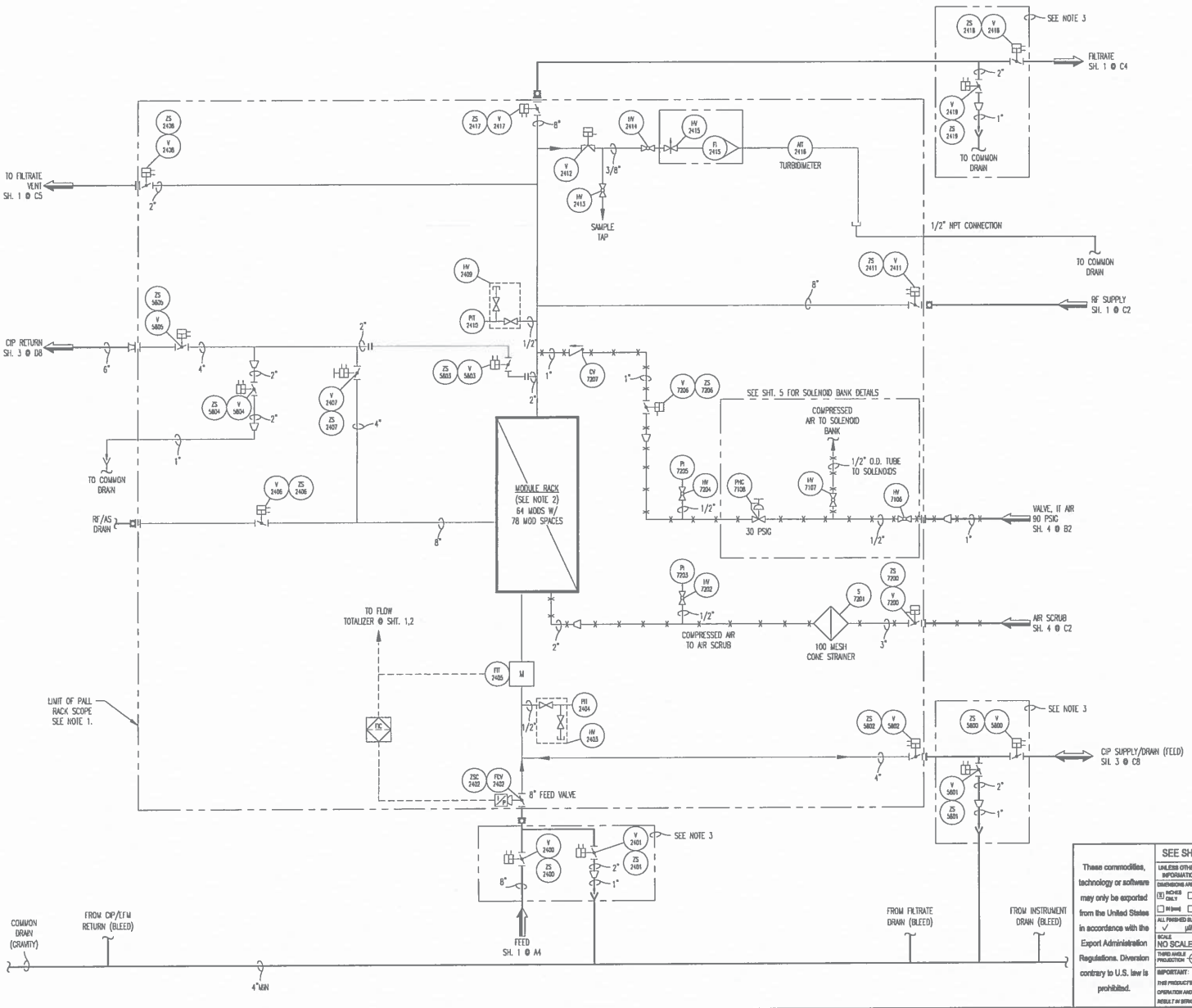

NOTES:

1. ALL PIPING, VALVES, AND INSTRUMENTS INSIDE BOX INDICATED ARE PROVIDED PRE-ASSEMBLED AND FACTORY TESTED, WITH THE EXCEPTION OF THE MODULE RACK AND FIT-2405.
2. MODULE RACK IS SHIPPED UNASSEMBLED, FOR FIELD ASSEMBLY BY OTHERS.
3. BLOCK AND BLEED VALVES ARE FURNISHED BY PALL FOR INSTALLATION BY OTHERS. BLOCK AND BLEED SPOOL PIECES ARE BY OTHERS.
4. ALL FLEX CONNECTORS AND EXPANSION JOINTS TO BE PROVIDED BY OTHERS.
5. INTRACONNECT PIPING BETWEEN VALVE & MODULE RACK NOT SHOWN.
6. FIT-2405 FURNISHED BY PALL FOR INSTALLATION BY OTHERS.

LEGEND
THICK LINES = INTERCONNECT PIPING BY OTHERS.
THIN LINES = INTERNAL PIPING BY PALL.

These commodities, technology or software may only be exported from the United States in accordance with the Export Administration Regulations. Diversion contrary to U.S. law is prohibited.

SEE SHEET 1 FOR REVISION

UNLESS OTHERWISE SPECIFIED, THE FOLLOWING INFORMATION PERTAINS ONLY TO THIS SHEET

	NAME	DATE
DRAWN BY	B. HARRIS	05JAN09
PROJECT ENGINEER	P. DITTMAN	05JAN09
ENGINEER	–	–
ENGINEER	–	–
ENGINEER	–	–
CHECKER	–	–

DIMENSIONS ARE IN [X] INCHES ONLY [ ] MILLIMETER ONLY [ ] IN [mm] [ ] mm [IN]
TOLERANCE: FRACTION ± 1/8; ANGLE ± 2 DEG; .XXXX ±; .XXX ±; .XX ±; .X ±; X ±
ALL FINISHED SURFACES ✓ µIN ✓ µm
SCALE NO SCALE [ ] DO NOT SCALE FROM DRAWING
THIRD ANGLE PROJECTION

CODE IDENTIFICATION NO. 17236
PROJECT ID W-21735
DRAWING NAME SYSTEM,MF,CASTLE ROCK EXPAN
VALVE RACK WITHOUT XR - SYSTEM P&ID

IMPORTANT: BEFORE ATTEMPTING TO OPERATE OR INSTALL THIS SYSTEM, IT IS ESSENTIAL TO READ AND UNDERSTAND THE PRODUCT'S OPERATION AND MAINTENANCE MANUAL (SHIPPED UNDER SEPARATE COVER). FAILURE TO READ THE OPERATION AND MAINTENANCE MANUAL BEFORE ATTEMPTING TO OPERATE ANY PALL CORPORATION EQUIPMENT MAY RESULT IN SERIOUS PERSONAL INJURY AND/OR PRODUCT DAMAGE, AND VOID ANY AND/OR ALL WARRANTIES

PALL Corporation
Pall Advanced Separation Systems
Industrial, Cortland NY

Copyright 2018 PALL CORPORATION
This document may contain confidential technical data, including trade secrets proprietary to Pall Corporation. The drawing, design rights and all other disclosures in this document are the property of Pall Corporation. Unauthorized use, copying, distribution to third parties, manufacture, or reproduction in whole or in part is prohibited.

DRAWING NUMBER NYCS000008558 REVISION 00
MATERIAL MATTER — DWG SIZE D SHEET 2 OF 6
TEMPLATE REV. 02MAR13

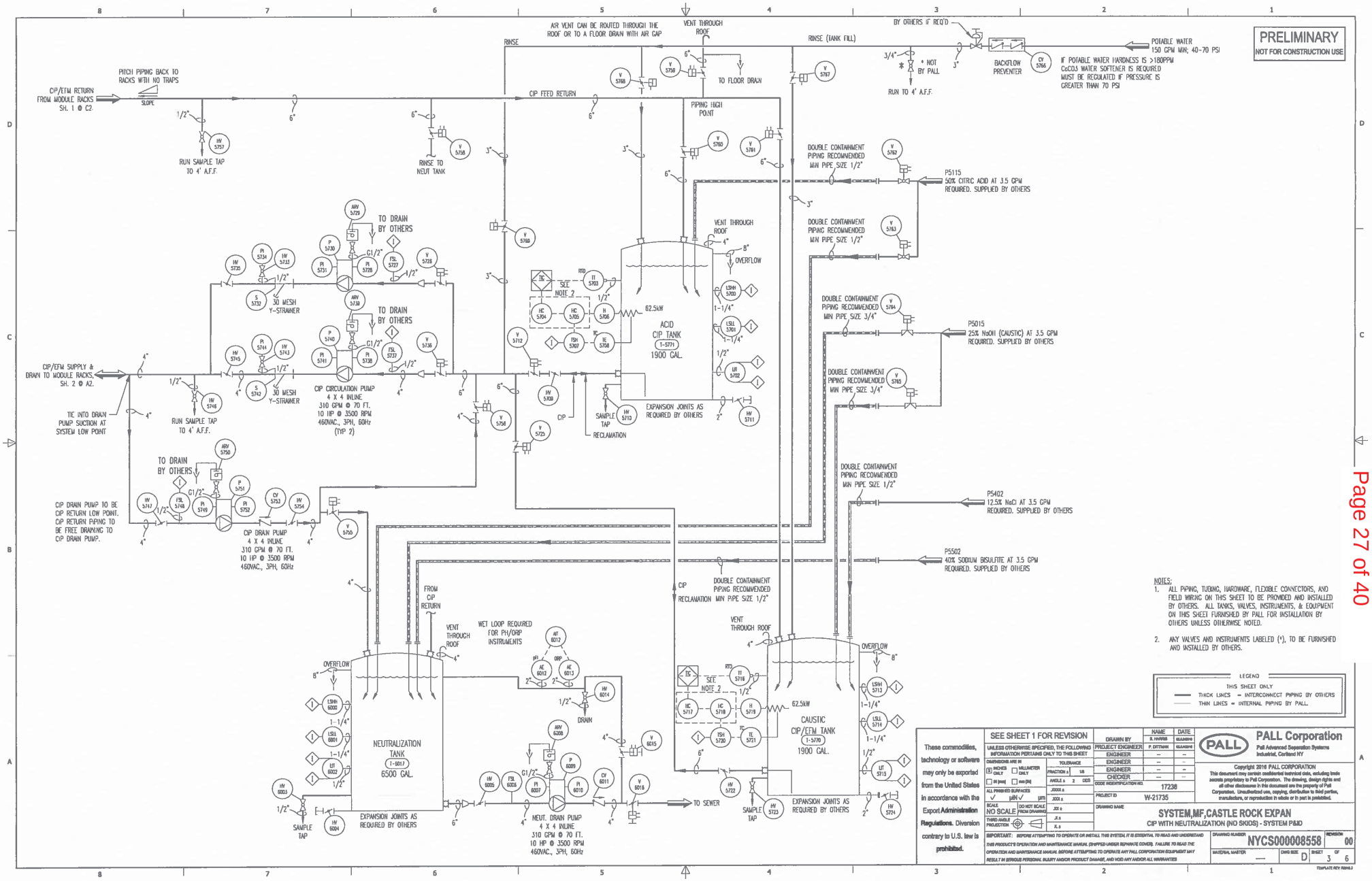
PRELIMINARY
NOT FOR CONSTRUCTION USE
AIR VENT CAN BE ROUTED THROUGH THE ROOF OR TO A FLOOR DRAIN WITH AIR GAP
VENT THROUGH ROOF
RINSE
RINSE (TANK FILL)
BY OTHERS IF REQ'D
POTABLE WATER 150 GPM MIN; 40-70 PSI
IF POTABLE WATER HARDNESS IS >180PPM CaCO3 WATER SOFTENER IS REQUIRED MUST BE REGULATED IF PRESSURE IS GREATER THAN 70 PSI
BACKFLOW PREVENTER
* NOT BY PALL
RUN TO 4' A.F.F.
TO FLOOR DRAIN
PITCH PIPING BACK TO RACKS WITH NO TRAPS
CIP/EFM RETURN FROM MODULE RACKS SH. 1 @ C2.
SLOPE
CIP FEED RETURN
PIPING HIGH POINT
RUN SAMPLE TAP TO 4' A.F.F.
RINSE TO NEUT TANK
DOUBLE CONTAINMENT PIPING RECOMMENDED MIN PIPE SIZE 1/2"
P5115 50% CITRIC ACID AT 3.5 GPM REQUIRED. SUPPLIED BY OTHERS
DOUBLE CONTAINMENT PIPING RECOMMENDED MIN PIPE SIZE 3/4"
P5015 25% NaOH (CAUSTIC) AT 3.5 GPM REQUIRED. SUPPLIED BY OTHERS
P5402 12.5% NaCl AT 3.5 GPM REQUIRED. SUPPLIED BY OTHERS
P5502 40% SODIUM BISULFITE AT 3.5 GPM REQUIRED. SUPPLIED BY OTHERS
TO DRAIN BY OTHERS
30 MESH Y-STRAINER
CIP CIRCULATION PUMP 4 X 4 INLINE 310 GPM @ 70 FT. 10 HP @ 3500 RPM 460VAC., 3PH, 60Hz (TYP 2)
CIP/EFM SUPPLY & DRAIN TO MODULE RACKS. SH. 2 @ A2.
TIE INTO DRAIN PUMP SUCTION AT SYSTEM LOW POINT
RUN SAMPLE TAP TO 4' A.F.F.
ACID CIP TANK 1-5771 1900 GAL.
62.5kW
SEE NOTE 2
EXPANSION JOINTS AS REQUIRED BY OTHERS
SAMPLE TAP
CIP
RECLAMATION
OVERFLOW
CIP DRAIN PUMP TO BE CIP RETURN LOW POINT. CIP RETURN PIPING TO BE FREE DRAINING TO CIP DRAIN PUMP.
CIP DRAIN PUMP 4 X 4 INLINE 310 GPM @ 70 FT. 10 HP @ 3500 RPM 460VAC., 3PH, 60Hz
FROM CIP RETURN
WET LOOP REQUIRED FOR PH/ORP INSTRUMENTS
NEUTRALIZATION TANK 1-5017 6500 GAL.
DRAIN
NEUT. DRAIN PUMP 4 X 4 INLINE 310 GPM @ 70 FT. 10 HP @ 3500 RPM 460VAC., 3PH, 60Hz
TO SEWER
CAUSTIC CIP/EFM TANK 1-5770 1900 GAL.
NOTES:
1. ALL PIPING, TUBING, HARDWARE, FLEXIBLE CONNECTORS, AND FIELD WIRING ON THIS SHEET TO BE PROVIDED AND INSTALLED BY OTHERS. ALL TANKS, VALVES, INSTRUMENTS, & EQUIPMENT ON THIS SHEET FURNISHED BY PALL FOR INSTALLATION BY OTHERS UNLESS OTHERWISE NOTED.
2. ANY VALVES AND INSTRUMENTS LABELED (*), TO BE FURNISHED AND INSTALLED BY OTHERS.
LEGEND
THIS SHEET ONLY
THICK LINES = INTERCONNECT PIPING BY OTHERS
THIN LINES = INTERNAL PIPING BY PALL.
These commodities, technology or software may only be exported from the United States in accordance with the Export Administration Regulations. Diversion contrary to U.S. law is prohibited.
SEE SHEET 1 FOR REVISION
PALL Corporation
Pall Advanced Separation Systems Industrial, Cortland NY
Copyright 2016 PALL CORPORATION
SYSTEM,MF,CASTLE ROCK EXPAN
CIP WITH NEUTRALIZATION (NO SKIDS) - SYSTEM P&ID
NYCS000008558
00
D
3 OF 6

PRELIMINARY
NOT FOR CONSTRUCTION USE

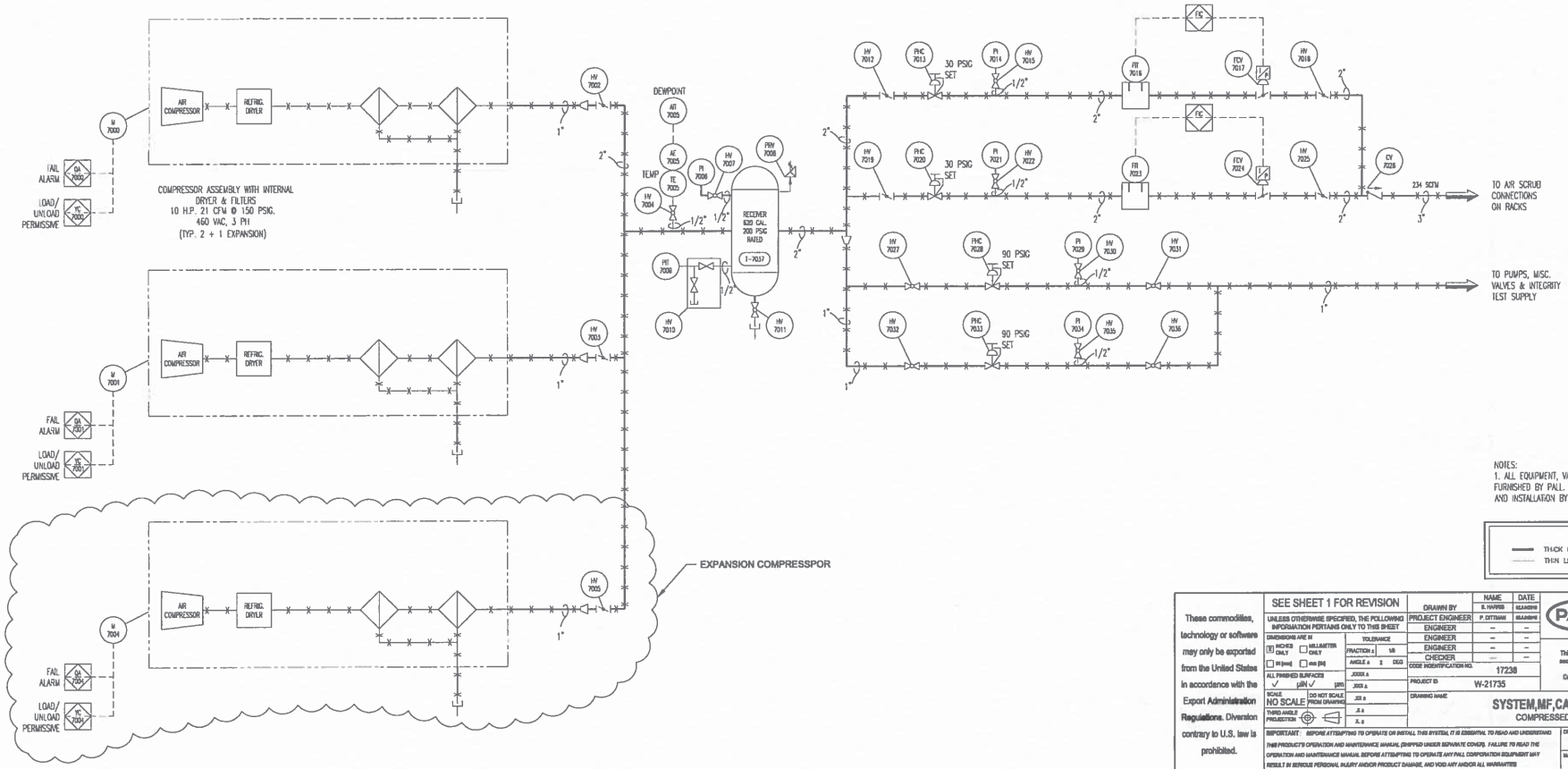

NOTES:
1. ALL EQUIPMENT, VALVES, AND INSTRUMENTS ON THIS SHEET FURNISHED BY PALL. ALL PIPING, WIRING, TUBING, HARDWARE, AND INSTALLATION BY OTHERS.

LEGEND
THIS SHEET ONLY
THICK LINES = INTERCONNECT PIPING BY OTHERS
THIN LINES = INTERNAL PIPING BY PALL.

These commodities, technology or software may only be exported from the United States in accordance with the Export Administration Regulations. Diversion contrary to U.S. law is prohibited.

SEE SHEET 1 FOR REVISION

UNLESS OTHERWISE SPECIFIED, THE FOLLOWING INFORMATION PERTAINS ONLY TO THIS SHEET

	NAME	DATE
DRAWN BY	R. HARRIS	03/24/2016
PROJECT ENGINEER	P. DITTMAN	03/24/2016
ENGINEER	--	--
ENGINEER	--	--
ENGINEER	--	--
CHECKER	--	--

DIMENSIONS ARE IN: [X] INCHES ONLY [ ] MILLIMETER ONLY [ ] IN [mm] [ ] mm [IN]
TOLERANCE: FRACTION ± 1/8; ANGLE ± 2 DEG; .XXXX ±; .XXX ±; .XX ±; .X ±; X. ±
ALL FINISHED SURFACES: ✓ µin ✓ µm
SCALE: NO SCALE — DO NOT SCALE FROM DRAWING
THIRD ANGLE PROJECTION

CODE IDENTIFICATION NO. 17238
PROJECT ID W-21735
DRAWING NAME: SYSTEM,MF,CASTLE ROCK EXPAN
COMPRESSED AIR - SYSTEM P&ID

PALL Corporation
Pall Advanced Separation Systems
Industrial, Cortland NY

Copyright 2016 PALL CORPORATION
This document may contain confidential technical data, including trade secrets proprietary to Pall Corporation. The drawing, design rights and all other disclosures in this document are the property of Pall Corporation. Unauthorized use, copying, distribution to third parties, manufacture, or reproduction in whole or in part is prohibited.

IMPORTANT: BEFORE ATTEMPTING TO OPERATE OR INSTALL THIS SYSTEM, IT IS ESSENTIAL TO READ AND UNDERSTAND THIS PRODUCT'S OPERATION AND MAINTENANCE MANUAL (SHIPPED UNDER SEPARATE COVER). FAILURE TO READ THE OPERATION AND MAINTENANCE MANUAL BEFORE ATTEMPTING TO OPERATE ANY PALL CORPORATION EQUIPMENT MAY RESULT IN SERIOUS PERSONAL INJURY AND/OR PRODUCT DAMAGE, AND VOID ANY AND/OR ALL WARRANTIES

DRAWING NUMBER	REVISION
NYCS000008558	00

MATERIAL MASTER: — | DWG SIZE: D | SHEET 4 OF 6

TEMPLATE REV 02/09/13

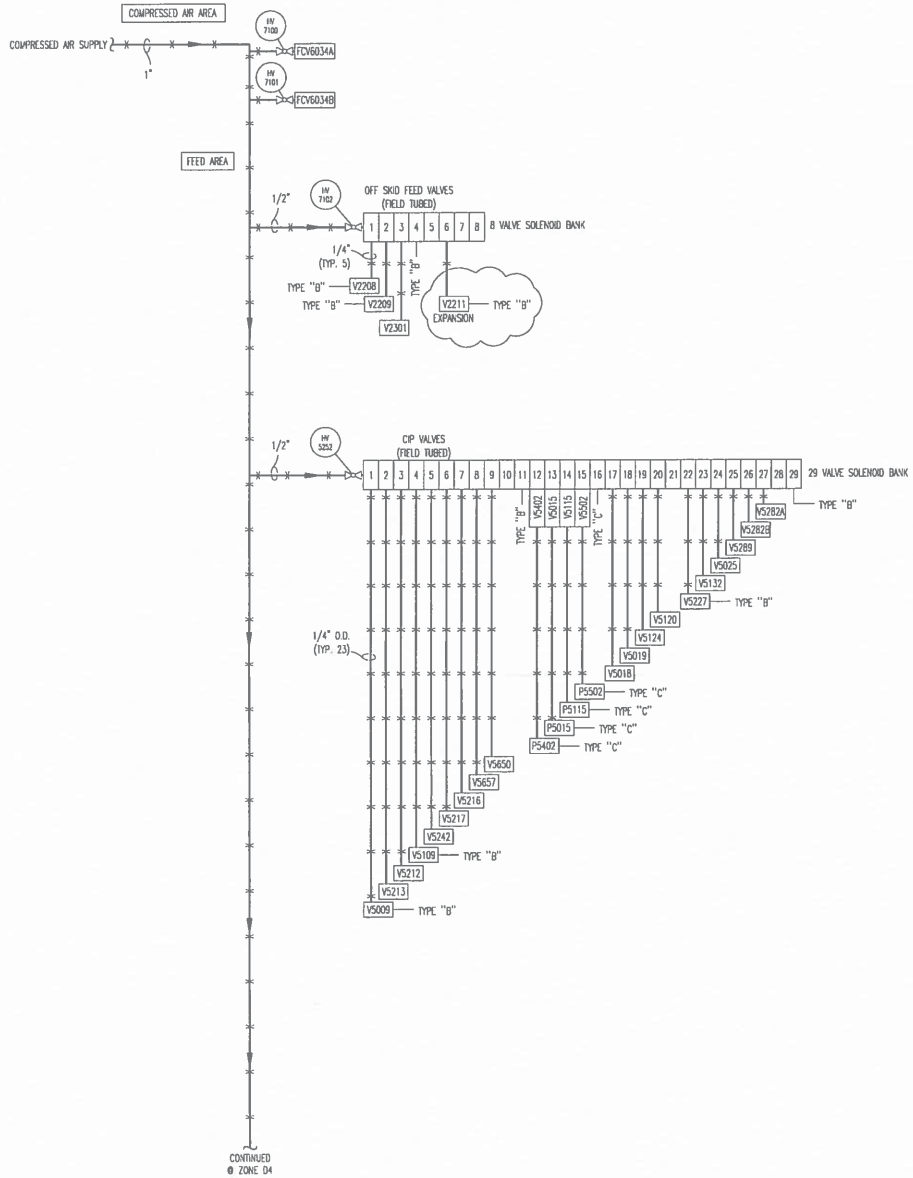

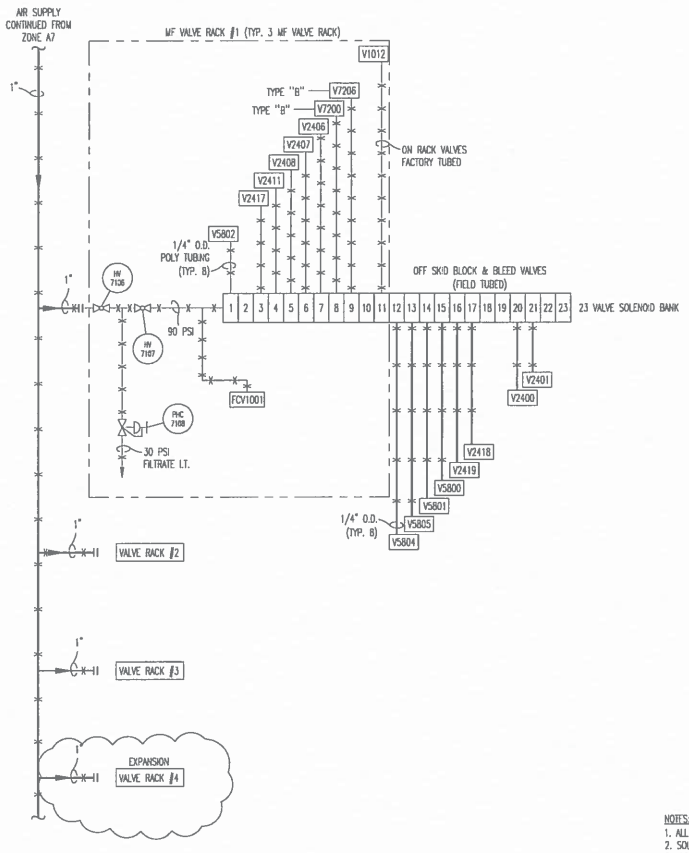

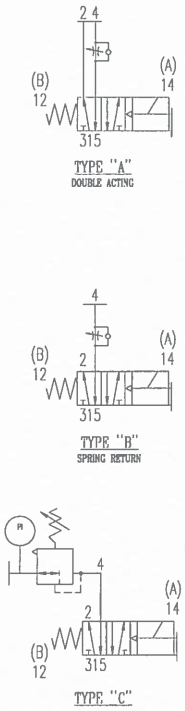

PRELIMINARY
NOT FOR CONSTRUCTION USE

NOTES:
1. ALL VALVES ARE TYPE "A" UNLESS OTHERWISE NOTED.
2. SOLENOID BANKS, VALVES, AND SKIDS SUPPLIED BY PALL.
3. ISOLATION VALVES TO BE INSTALLED AS REQUIRED BY OTHERS.
4. FIELD TUBING TO BE SST, POLY OR COPPER.
5. REFER TO THE PROJECT SPECIFIC ELECTRICAL DRAWINGS FOR FOR THE ACT ORIENTATION OF VALVES IN RELATION TO THE SOLENOID BANKS.

LEGEND
THIS SHEET ONLY
THICK LINES = FIELD INSTALLED TUBING BY OTHERS
THIN LINES = FACTORY INSTALLED TUBING BY PALL.

These commodities, technology or software may only be exported from the United States in accordance with the Export Administration Regulations. Diversion contrary to U.S. law is prohibited.

SEE SHEET 1 FOR REVISION

UNLESS OTHERWISE SPECIFIED, THE FOLLOWING INFORMATION PERTAINS ONLY TO THIS SHEET

DIMENSIONS ARE IN: [B] INCHES ONLY / [ ] MILLIMETER ONLY / [ ] IN (mm) / [ ] mm (IN)

ALL FINISHED SURFACES: ✓ µin ✓ µm

SCALE: NO SCALE — DO NOT SCALE FROM DRAWING

THIRD ANGLE PROJECTION

TOLERANCE: FRACTION ± 1/8; ANGLE ± 3 DEG; .XXX ±; .XX ±; .X ±; X. ±

	NAME	DATE
DRAWN BY	B. HARRIS	05JAN07
PROJECT ENGINEER	P. DITTMAN	05JAN07
ENGINEER	--	--
ENGINEER	--	--
ENGINEER	--	--
CHECKER	--	--

CODE IDENTIFICATION NO. 17238

PROJECT ID W-21735

DRAWING NAME: SYSTEM,MF,CASTLE ROCK EXPAN
COMPRESSED AIR SCHEMATIC - SYSTEM P&ID

IMPORTANT: BEFORE ATTEMPTING TO OPERATE OR INSTALL THIS SYSTEM, IT IS ESSENTIAL TO READ AND UNDERSTAND THIS PRODUCT'S OPERATION AND MAINTENANCE MANUAL (SHIPPED UNDER SEPARATE COVER). FAILURE TO READ THE OPERATION AND MAINTENANCE MANUAL BEFORE ATTEMPTING TO OPERATE ANY PALL CORPORATION EQUIPMENT MAY RESULT IN SERIOUS PERSONAL INJURY AND/OR PRODUCT DAMAGE, AND VOID ANY AND/OR ALL WARRANTIES

PALL Corporation
Pall Advanced Separation Systems
Industrial, Carlsend NY

Copyright 2016 PALL CORPORATION
This document may contain confidential technical data, including trade secrets proprietary to Pall Corporation. The drawing, design rights and all other disclosures in this document are the property of Pall Corporation. Unauthorized use, copying, distribution to third parties, manufacture, or reproduction in whole or in part is prohibited.

DRAWING NUMBER: NYCS000008558 — REVISION: 00
MATERIAL MASTER: — DWG SIZE: D — SHEET 5 OF 6
TEMPLATE REV 02JAN13

VALVE SYMBOLS

- VACUUM BREAKER
- GATE VALVE OR MISCELLANEOUS
- GLOBE VALVE
- CHECK VALVE
- SPRING LOADED CHECK VALVE
- PLUG VALVE
- 3-WAY PLUG VALVE
- MANUAL ROTARY/BALL VALVE
- ACTUATED ROTARY/BALL VALVE
- MANUAL 3-WAY BALL VALVE
- ACTUATED 3-WAY BALL VALVE
- MANUAL BUTTERFLY VALVE
- ACTUATED BUTTERFLY VALVE
- BUTTERFLY VALVE (W/ FIXED ORIFICE IN DISC)
- NEEDLE VALVE
- ANGLE VALVE
- CONTROL VALVE
- FLOAT VALVE
- AIR RELEASE VALVE
- CORPORATION STOP VALVE/INJECTOR
- BACKFLOW PREVENTER
- DIAPHRAGM VALVE
- SAFETY RELIEF VALVE
- 2 WAY SOLENOID VALVE
- 3 WAY SOLENOID VALVE (DE, DX)
- 4 WAY SOLENOID VALVE
- PNEUMATIC ACTUATOR CONTROL VALVE
- PRESSURE REDUCING VALVE (REGULATOR)

TYPICAL SYMBOLS

- GENERIC ACTUATOR W/ & W/O TRAVEL STOPS
- ACTUATOR, AIR TO CLOSE (SPRING RETURN) W/ & W/O TRAVEL STOPS
- ACTUATOR, AIR TO OPEN (SPRING RETURN) W/ & W/O TRAVEL STOPS
- ACTUATOR, AIR TO ACTUATE (DOUBLE ACTING) W/ & W/O TRAVEL STOPS
- TRAVEL STOP
- PNEUMATIC VALVE ACTUATOR
- SECONDARY CONTAINMENT
- UNDEFINED SIGNAL
- PNEUMATIC SIGNAL
- COMPRESSED AIR PIPING
- ELECTRIC SIGNAL
- FIELD MOUNTED DEVICE
- PANEL FACE MOUNTED DEVICE
- INSIDE OF PANEL MOUNTED DEVICE
- DEVICE MOUNTED ON AUXILIARY PANEL FACE
- DEVICE MOUNTED INSIDE OF AUXILIARY PANEL
- PROGRAMMABLE LOGIC CONTROLLER IN MAIN PANEL
- PROGRAMMABLE LOGIC CONTROLLER IN AUXILIARY PANEL
- DISPLAY ON MAIN PANEL
- COMPUTER FUNCTION PRIMARY LOCATION
- COMPUTER FUNCTION AUXILIARY LOCATION
- SUMMATION
- CRT DISPLAY — MESSAGE DISPLAY ON CRT
- ELECTRIC OPERATOR
- INTERLOCK
- VENTURI TUBE FLOWMETER
- MAGNETIC FLOWMETER W/ INTEGRAL ELECTRONICS
- VARIABLE AREA FLOWMETER
- THERMAL MASS FLOWMETER

TYPICAL SYMBOLS

- TWO (2) ITEMS IN ONE (1) DEVICE GUAGE (PRESSURE)
- FY I/P — FLOW CONVERTER (ADD IDENTIFYING INFORMATION OUTSIDE BALLOON TO CLARIFY FUNCTION OF ITEM INSIDE BALLOON, EXT. I/P: CURRENT TO PNEUMATIC CONVERTER).
- PULSATION DAMPENER
- AIR GAP/GRAVITY DRAIN
- STATIC MIXER
- "Y" STRAINER
- STRAINER/FILTER
- E — BATTERY DATUM
- (CUSTOMER) (PALL) — MECHANICAL BATTERY LIMIT
- (CUSTOMER) (PALL) — ELECTRICAL BATTERY LIMIT
- SPRAY BALL
- VENT
- LINE SIZE
- LINE BREAK
- FLOW ARROW
- SLOPE
- PROXIMITY ULTRASOUND SENSOR
- SWING ELBOW
- SIGHT GLASS & CALIBRATION COLUMN
- EDUCTOR (W/ GATE VALVE & FUNNEL)
- ITEM OR EQUIPMENT NO.

TYPICAL SYMBOLS

- ANTIFOAM INLET
- SNUBBER
- THERMOWELL
- DIAPHRAGM SEAL
- SLIP JOINT/EXPANSION CONNECTION
- CONSTANT FLOW FITTING
- FLEXIBLE CONNECTOR/ EXPANSION JOINT
- ECCENTRIC REDUCERS
- FLEXIBLE REDUCER
- CONCENTRIC REDUCER
- FLANGED CONNECTION
- AIR GAP
- CAPPED OR PLUGGED CONNECTION
- PRESSURE CALIBRATION MANIFOLD (SINGLE UNIT)
- FLOWMETER-GEAR DISPLACEMENT
- DIGITAL POSITIONER
- MUFFLER
- AIR RECEIVER
- DRYER
- COMPRESSOR
- DIFFERENTIAL (FLOW)
- HEATER (TANK)

NOTES:
1. SOME SYMBOLS ON THIS SHEET MAY NOT APPEAR ON THIS PARTICULAR SYSTEM P&ID.

TYPICAL SYMBOLS

- TANK MIXER
- TOTE/SINGLE/STACKED
- STORAGE TANK

PUMP SYMBOLS

- GENERIC PUMP
- CENTRIFUGAL PUMP
- ROTARY PUMP
- (TUBING) PERISTALTIC PUMP
- DOUBLE HEAD PERISTALTIC PUMP
- MOTORIZED DIAPHRAGM PUMP
- PNEUMATIC DIAPHRAGM PUMP
- METERING PUMP
- VERTICAL PUMP
- SUBMERGED PUMP PUMP (GENERIC)
- INLINE PUMP

FLOW INSTRUMENTS

FC	FLOW CONTROLLER (BLIND)
FCV	FLOW CONTROL VALVE
FD	FLOW DIRECTION
FE	FLOW ELEMENT
FFC	FLOW RATIO CONTROLLER
FG	FLOW SIGHT GLASS
FI	FLOW INDICATOR
FIC	FLOW INDICATOR CONTROLLER
FIT	FLOW INDICATOR TRANSMITTER
FM	FLOW METER
FQ	FLOW TOTALIZER
FQC	FLOW TOTALIZER CONTROLLER
FR	FLOW RECORDER
FRC	FLOW RECORDER CONTROLLER
FSH	FLOW SWITCH HIGH
FSHH	FLOW SWITCH HIGH HIGH
FSLL	FLOW SWITCH LOW LOW
FX	FLOW INTEGRATOR

PRESSURE INSTRUMENTS

DSPI	DIFFERENTIAL SET POINT INDICATOR
PC	PRESSURE CONTROLLER (BLIND)
PDC	PRESSURE DIFFERENTIAL CONTROLLER
PDH	DIFFERENTIAL PRESSURE HIGH
PDHH	DIFFERENTIAL PRESSURE HIGH HIGH
PDI	DIFFERENTIAL PRESSURE INDICATOR
PDIC	PRESSURE DIFFERENTIAL INDICATING CONTROLLER
PDS	DIFFERENTIAL PRESSURE SWITCH
PHC	PRESSURE HAND CONTROL (REGULATOR)
PI	PRESSURE INDICATOR
PIC	PRESSURE INDICATING CONTROLLER
PIS	PRESSURE INDICATING SWITCH
PIT	PRESSURE INDICATING TRANSMITTER
PLH	PRESSURE LIMIT HIGH
PR	PRESSURE RECORDER
PRC	PRESSURE RECORDER CONTROLLER
PRV	PRESSURE REDUCING VALVE
PSH	PRESSURE SWITCH HIGH
PSHH	PRESSURE SWITCH HIGH HIGH
PSL	PRESSURE SWITCH LOW
PSLL	PRESSURE SWITCH LOW LOW
PT	PRESSURE TRANSMITTER (BLIND)

LEVEL INSTRUMENTS

LC	LEVEL CONTROLLER (BLIND)
LCV	LEVEL CONTROL VALVE
LE	LEVEL ELEMENT
LG	LEVEL GAGE GLASS
LI	LEVEL INDICATOR
LIC	LEVEL INDICATING CONTROLLER
LIT	LEVEL INDICATING TRANSMITTER
LR	LEVEL RECORDER
LRC	LEVEL RECORDING CONTROLLER
LSH	LEVEL SWITCH HIGH
LSHH	LEVEL SWITCH HIGH HIGH
LSL	LEVEL SWITCH LOW
LSLL	LEVEL SWITCH LOW LOW
LSM	LEVEL SWITCH MID
LT	LEVEL TRANSMITTER (BLIND)

TEMPERATURE INSTRUMENTS

TC	TEMPERATURE CONTROLLER (BLIND)
TCV	TEMPERATURE CONTROL VALVE
TE	TEMPERATURE ELEMENT
TI	TEMPERATURE INDICATOR
TIC	TEMPERATURE INDICATING CONTROLLER
TIT	TEMPERATURE INDICATING TRANSMITTER
TLH	TEMPERATURE LIMIT HIGH
TRC	TEMPERATURE RECORDER CONTROLLER
TSH	TEMPERATURE SWITCH HIGH
TSHH	TEMPERATURE SWITCH HIGH HIGH
TSL	TEMPERATURE SWITCH LOW
TSLL	TEMPERATURE SWITCH LOW LOW
TT	TEMPERATURE TRANSMITTER

MISCELLANEOUS

A	ANALYTICAL INSTRUMENT
AC	AIR COMPRESSOR
AE	ANALYTICAL ELEMENT
AFF	ABOVE FINISHED FLOOR
AIT	ANALYTICAL INSTRUMENT TRANSMITTER
A.S.	AIR SUPPLY
A.T.A.	AIR TO ACTIVATE
A.T.C.	AIR TO CLOSE
A.T.O.	AIR TO OPEN
BR	BACKWASH DISCHARGE
BS	BACKWASH SUPPLY
BT	BULK TOTE
CA	CITRIC ACID
CIP	CLEAN-IN-PLACE
CIPR	CLEAN-IN-PLACE RETURN
CIPS	CLEAN-IN-PLACE SUPPLY
CLS	SODIUM HYPOCHLORITE
CV	CHECK VALVE
DE	DE-ENERGIZE
DPI	DIFFERENTIAL PRESSURE INDICATOR
E	ENERGIZE
EX	EXHAUST
FT	FILTRATE
FW	FINISHED WATER
FP	FEED PUMP
H	HEATER
HTR	HEATER
HV	HAND VALVE (MANUAL)
I/P	CURRENT TO PNEUMATIC TRANSDUCER
LS	LIMIT SWITCH
M	MECHANICAL DEVICE/MISCELLANEOUS
MEM	MEMBRANE
MV	MISCELLANEOUS VALVE
MX	MIXER
N.C.	NORMALLY CLOSED
NEU	NEUTRALIZATION
N.O.	NORMALLY OPEN
O/C/A	OPEN-CLOSE-AUTO
ORP	OXIDATION REDUCTION POTENTIAL
P	PUMP
PA	PLANT AIR
P/A	PULSE TO ANALOG
PD	PROCESS DRAIN
P/I	PNEUMATIC TO CURRENT TRANSDUCER
PRD	PRESSURE RUPTURE DISK
PRV	PRESSURE RELIEF VALVE
PS	PUMP SPEED
PVC	POLYVINYL CHLORIDE
QA	FAIL ALARM SYSTEM
RCVR	RECEIVER
REV.	REVERSING
RF	REVERSE FILTRATION
S or STRN	STRAINER
SBS	SODIUM BISULFITE
SC	SPEED CONTROL
SG	SIGHT GLASS
SH	SODIUM HYDROXIDE
S.P.	SET POINT
SS	SELECTOR SWITCH
SSTL	STAINLESS STEEL
SW	SETTLED WATER
T	TANK
TP	TRANSFER PUMP
TR	TRAIN
TS	TRAVEL STOP
TW	TREATED WATER
UA	MULTIVARIABLE ALARM
UOH	UNLESS OTHERWISE NOTED
V	VALVE (ACTUATED)
VFC	VOLT FREE CONTACT
VFD	VARIABLE FREQUENCY DRIVE
WIT	WEIGHT INDICATING TRANSMITTER
XR	EXCESS RECIRCULATION
Y	CONVERTER
YC	LOAD/UNLOAD SIGNAL

MISCELLANEOUS

ZS	LIMIT SWITCH OPEN & CLOSED
ZSFC	LIMIT SWITCH FORWARD CLOSED
ZSO	LIMIT SWITCH OPEN
ZSC	LIMIT SWITCH CLOSED
ZSRC	LIMIT SWITCH REVERSE CLOSED

PRELIMINARY
NOT FOR CONSTRUCTION USE

These commodities, technology or software may only be exported from the United States in accordance with the Export Administration Regulations. Diversion contrary to U.S. law is prohibited.

SEE SHEET 1 FOR REVISION

UNLESS OTHERWISE SPECIFIED, THE FOLLOWING INFORMATION PERTAINS ONLY TO THIS SHEET

DIMENSIONS ARE IN: (B) INCHES ONLY; millimeter only; (B) [mm]; mm [IN]

ALL FINISHED SURFACES: µIN ✓; µm ✓

SCALE: NO SCALE — DO NOT SCALE FROM DRAWING

THIRD ANGLE PROJECTION

TOLERANCE: FRACTION ± 1/8; ANGLE ± 2 DEG; .XXXX ±; .XXX ±; .XX ±; .X ±; X ±

	NAME	DATE
DRAWN BY	R. HAWKS	03/24/09
PROJECT ENGINEER	P. DITTMAN	03/24/09
ENGINEER	—	—
ENGINEER	—	—
ENGINEER	—	—
ENGINEER	—	—
CHECKER	—	—

CODE IDENTIFICATION NO. 17238

PROJECT ID W-21735

DRAWING NAME SYSTEM,MF,CASTLE ROCK EXPAN
LEGEND - SYSTEM P&ID

IMPORTANT: BEFORE ATTEMPTING TO OPERATE OR INSTALL THIS SYSTEM, IT IS ESSENTIAL TO READ AND UNDERSTAND THIS PRODUCT'S OPERATION AND MAINTENANCE MANUAL (SHIPPED UNDER SEPARATE COVER). FAILURE TO READ THE OPERATION AND MAINTENANCE MANUAL BEFORE ATTEMPTING TO OPERATE ANY PALL CORPORATION EQUIPMENT MAY RESULT IN SERIOUS PERSONAL INJURY AND/OR PRODUCT DAMAGE, AND VOID ANY AND/OR ALL WARRANTIES

PALL Corporation
Pall Advanced Separation Systems
Industrial, Cortland NY

Copyright 2010 PALL CORPORATION
This document may contain confidential technical data, including trade secrets proprietary to Pall Corporation. The drawing, design rights and all other disclosures in this document are the property of Pall Corporation. Unauthorized use, copying, distribution to third parties, manufacture, or reproduction in whole or in part is prohibited.

DRAWING NUMBER NYCS000008558 — REVISION 00
MATERIAL MASTER ——— — DWG SIZE D — SHEET 6 OF 6
TEMPLATE REV. R3R13

REVISION	REVISION DESCRIPTION	ENG BY	PROJ ENG	ENG MFG	ENG MFG	ENG MFG	ENG MFG
01	CUSTOMER DRAWINGS.	MOL 6/22/2011	AAB 6/22/2011	---- ----	---- ----	---- ----	RH 06/27/2011
02	CUSTOMER DRAWINGS.	MOL 2/23/2011	AAB 2/23/2011	---- ----	---- ----	---- ----	RH 2/23/2011
03	ADDED PREFIX "PC-" TO ALL INSTRUMENTS.	MOL 2/23/2011	AAB 2/23/2011	---- ----	---- ----	---- ----	RH 2/23/2011
04	UPDATED CP NAMEPLATE TO CORRECT DATE.	MOL 1/10/2011	AAB 1/10/2011	---- ----	---- ----	---- ----	RH 1/10/2011
05	CHANGED LOGIC SIGNALS BETWEEN MCP AND MCC TO 120VAC.	MOL 6/01/2011	AAB 6/01/2011	---- ----	---- ----	---- ----	RH 06/01/2011
06	CUSTOMER MARKUPS.	MOL 06/06/2011	AAB 06/06/2011	---- ----	---- ----	---- ----	RH 06/06/2011
07	ADDED SHEET 5 AND REVISED SHEETS 2 & 3 TO ADD VALVE RACK J4 COMPONENTS FOR EXPANSION	MOL 08/06/2014	ESP 08/06/2014	---- ----	---- ----	---- ----	RH 08/06/2014

PALL

PALL ADVANCED SEPARATIONS SYSTEMS

PALL MICROFILTRATION SYSTEM INTERCONNECTION DETAILS

CASTLE ROCK

01.000185

DRAWING TABLE OF CONTENTS

SHEET 1: COVER SHEET AND TABLE OF CONTENTS

SHEET 2: POWER ONE-LINE DIAGRAM

SHEET 3: NETWORK DIAGRAM

SHEET 4: INTERCONNECTION WIRING DIAGRAM

SHEET 5: INTERCONNECTION WIRING DIAGRAM

--> DO NOT SCALE DRAWING <--

UNLESS OTHERWISE SPECIFIED, THE FOLLOWING INFORMATION PERTAINS ONLY TO THIS SHEET

CHECKPOINT DATE	TOLERANCE
☐ INCHES ONLY	X ±
☐ MILLIMETERS ONLY	X.X ±
☐ IN (inch) ☐ mm (M)	X.XX ±
☐	X.XXX ±
ALL FINISHED SURFACES	ANGULAR ±
✓ ACM	WELD ±
X-RED AREAS INSPECTION	FINISH NONE

CODE IDENT. NO. 17238	NAME	DATE
DRAWN BY	M. LOZANO	6/08/2011
PROJECT ENGINEER	A. BEARDS	6/08/2011
ENGINEER	----	----
ENGINEER	----	----
ENGINEER	----	----
ENGINEER	A. ABRAHAMSON	6/08/2011

DRAWING NAME

ASSY,ELECT.01.00185,CASTLE ROCK,INTERCONN

INTERCONNECTION DETAIL DRAWING-COVER SHEET/TABLE OF CONTENTS

PALL Pall Corporation
Pall Advanced Separations Systems
Cortland, New York

PS. REF. NUMBER: ---- ---- ----

REVISION: 07 | SHT SIZE: D

PARENT NUMBER: 01.00185 | DRAWING NUMBER: 71511 | MAC NUMBER: 100000030223 | SHEET 1 OF 5

Copyright 2012 PALL CORPORATION

This document may contain confidential technical data, including trade secrets proprietary to Pall Corporation. The drawing, design rights and all other documents in this document are the property of Pall Corporation. Unauthorized use, copying, distribution to third parties, manufacture, or reproduction in whole or in part is prohibited.

IMPORTANT: BEFORE APC-TRAINING TO OPERATE OR INSTALL THIS SYSTEM, IT IS ESSENTIAL TO READ AND UNDERSTAND THIS PRODUCT'S OPERATION AND MAINTENANCE MANUAL (COMPED UNDER SEPARATE COVER). FAILURE TO READ THE OPERATION AND MAINTENANCE MANUAL BEFORE APC-TRAINING TO OPERATE ANY PALL CORPORATION EQUIPMENT MAY RESULT IN SERIOUS PERSONAL INJURY AND/OR PRODUCT DAMAGE, AND MAY VOID ANY AND/OR ALL WARRANTY.

CAD SYSTEM: AUTOCAD

SEE SHEET 1 FOR REVISIONS

FILTRATION SYSTEM ONE LINE POWER DIAGRAM

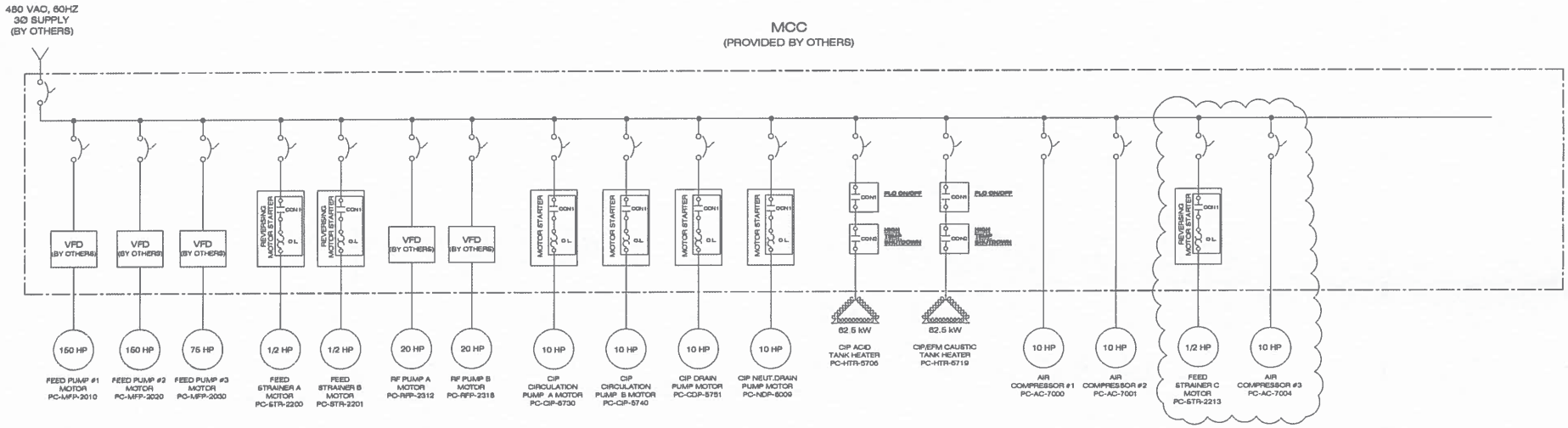

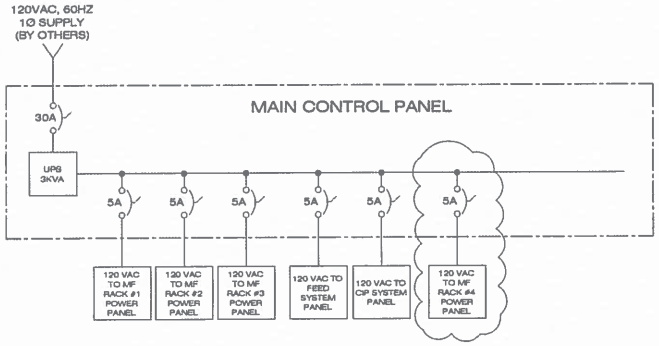

—REVISION CLOUD INDICATES NEW EQUIPMENT THAT NEEDS POWER. SEE SHEET 5 FOR INTERCONNECT WIRING FOR NEW CONTROL SIGNALS.

--> DO NOT SCALE DRAWING <--
UNLESS OTHERWISE SPECIFIED, THE FOLLOWING INFORMATION PERTAINS ONLY TO THIS SHEET

CODE IDENT. NO. 17238	NAME	DATE
DRAWN BY	M. LEONES	04/08/08
PROJECT ENGINEER	A. BEARDS	04/08/08
ENGINEER	----	----
ENGINEER	----	----
ENGINEER	----	----
CHECKER	A. ABBOUD/MRB	04/08/08

Pall Corporation
Pall Advanced Separations Systems
Cortland, New York

ASSY,ELEC.01.00185,CASTLE ROCK,INTERCONN
POWER ONE-LINE DIAGRAM

SCALE: NONE | SCHEM. NUMBER: 01.00185 | DRAWING NUMBER: 71511 | MFG. NUMBER: 100000030223 | SHEET 2 OF 5 | REV. 07 | D

Copyright 2012 PALL CORPORATION
This document may contain confidential technical data, including trade secrets proprietary to Pall Corporation. The drawing, design rights and all other disclosures in this document are the property of Pall Corporation. Unauthorized use, copying, distribution to third parties, manufacture, or reproduction in whole or in part is prohibited.

IMPORTANT: BEFORE APPLYING TO OPERATE OR ASSIST WITH SERVICE, IT IS ESSENTIAL TO READ AND UNDERSTAND THIS PRODUCT'S OPERATION AND MAINTENANCE MANUAL (SHIPPED UNDER SEPARATE COVER). FAILURE TO FOLLOW THE OPERATION AND MAINTENANCE MANUAL BEFORE APPLYING TO OPERATE ANY PALL CORPORATION EQUIPMENT MAY RESULT IN SERIOUS PERSONAL INJURY AND/OR PROPERTY DAMAGE, AND MAY VOID ANY AND/OR ALL WARRANTY.

CAD SYSTEM: AUTOCAD

SEE SHEET 1 FOR REVISIONS

NETWORK DIAGRAM

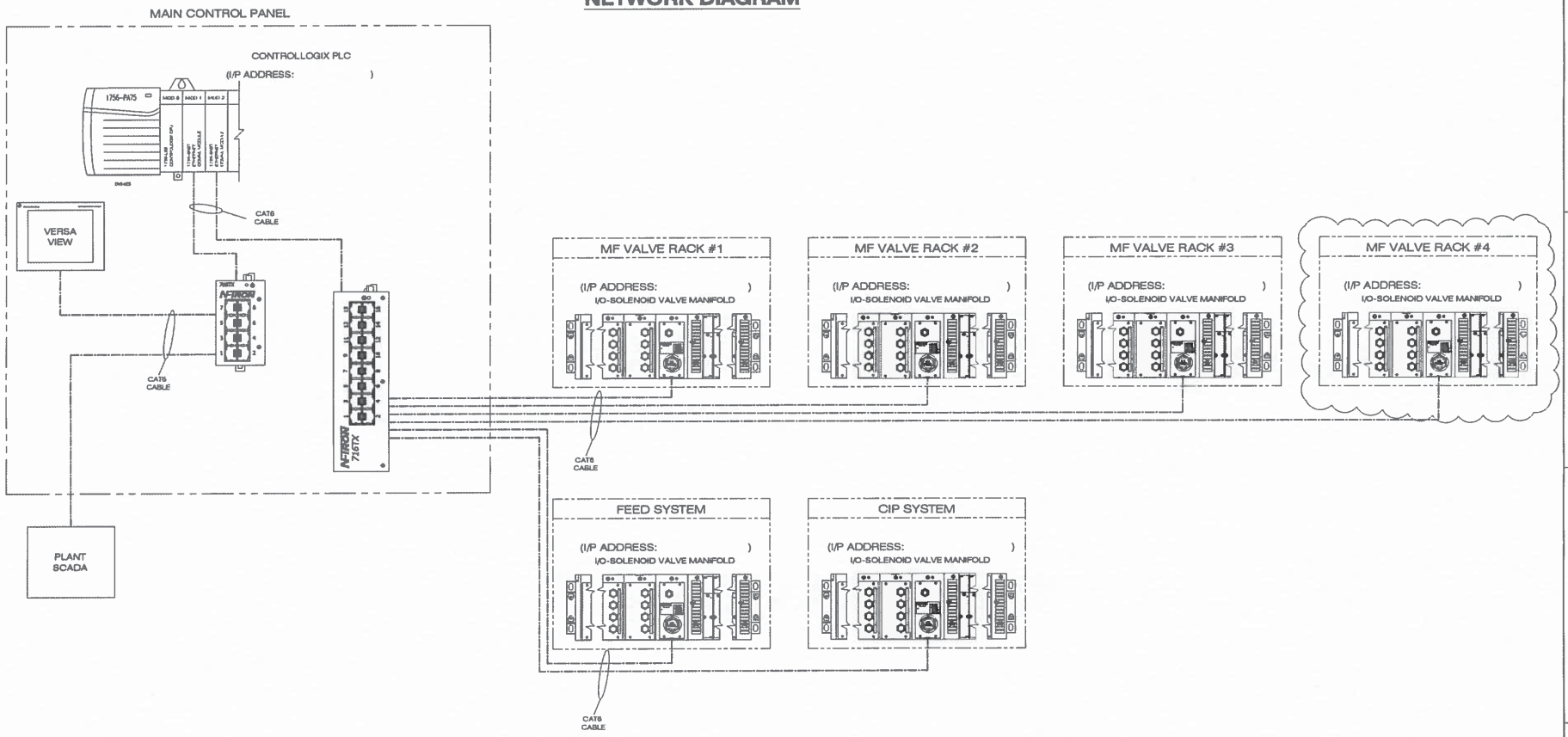

NOTES:

2A. **ALL EXTERNAL COMMUNICATION CABLES AND MATERIALS WILL BE SUPPLIED AND INSTALLED BY OTHERS.**

2B. ETHERNET CABLE SHALL BE CATEGORY 6 UNSHIELDED TWISTED PAIR DATA CABLE (BELDEN CAT# 1583A OR EQUAL) WITH RJ45 AND M12 STYLE PLUGS, AND SHALL BE PROTECTED BY INSTALLATION IN PVC CONDUIT OR A SUITABLE CABLE TRAY. METAL CONDUIT SHALL NOT BE USED.

--> DO NOT SCALE DRAWING <--
UNLESS OTHERWISE SPECIFIED, THE FOLLOWING INFORMATION PERTAINS ONLY TO THIS SHEET

	NAME	DATE
CODE IDENT. NO. 17230		
DRAWN BY	M. LOUIS	MM/DD/YY
PROJECT ENGINEER	A. MARTIN	MM/DD/YY
ENGINEER	----	----
ENGINEER	----	----
ENGINEER	----	----
CHECKER	A. ABBOUD/MARTIN	MM/DD/YY

Pall Corporation
Pall Advanced Separations Systems
Cortland, New York

FILE NAME: ---- ---- ----
REVISION: 07
CAD FILE: D

DRAWING NAME: ASSY,ELEC.01.00185,CASTLE ROCK,INTERCONN
POWER ONE-LINE DIAGRAM

PALL NUMBER: 01.00185
MATERIAL NUMBER: 71511
DOC NUMBER: 100000030223
SHEET 3 OF 5

THIRD ANGLE PROJECTION
SCALE: NONE

Copyright 2012 PALL CORPORATION
This document may contain confidential technical data, including trade secrets proprietary to Pall Corporation. The drawing, design rights and all other disclosures in this document are the property of Pall Corporation. Unauthorized use, copying, distribution to third parties, manufacture, or reproduction in whole or in part is prohibited.

IMPORTANT: BEFORE ATTEMPTING TO OPERATE OR REPAIR, THIS SYSTEM IS ESSENTIAL TO READ AND UNDERSTAND THIS PRODUCT'S OPERATION AND MAINTENANCE MANUAL (UNLESS SEPARATE COVER). FAILURE TO READ THE OPERATION AND MAINTENANCE MANUAL BEFORE ATTEMPTING TO OPERATE ANY PALL CORPORATION EQUIPMENT MAY RESULT IN SERIOUS PERSONAL INJURY AND/OR PRODUCT DAMAGE, AND MAY VOID ANY AND/OR ALL WARRANTY.

AB SYSTEM: AUTOCAD

SYSTEM INTERCONNECTION DETAILS

SEE SHEET 1 FOR REVISIONS

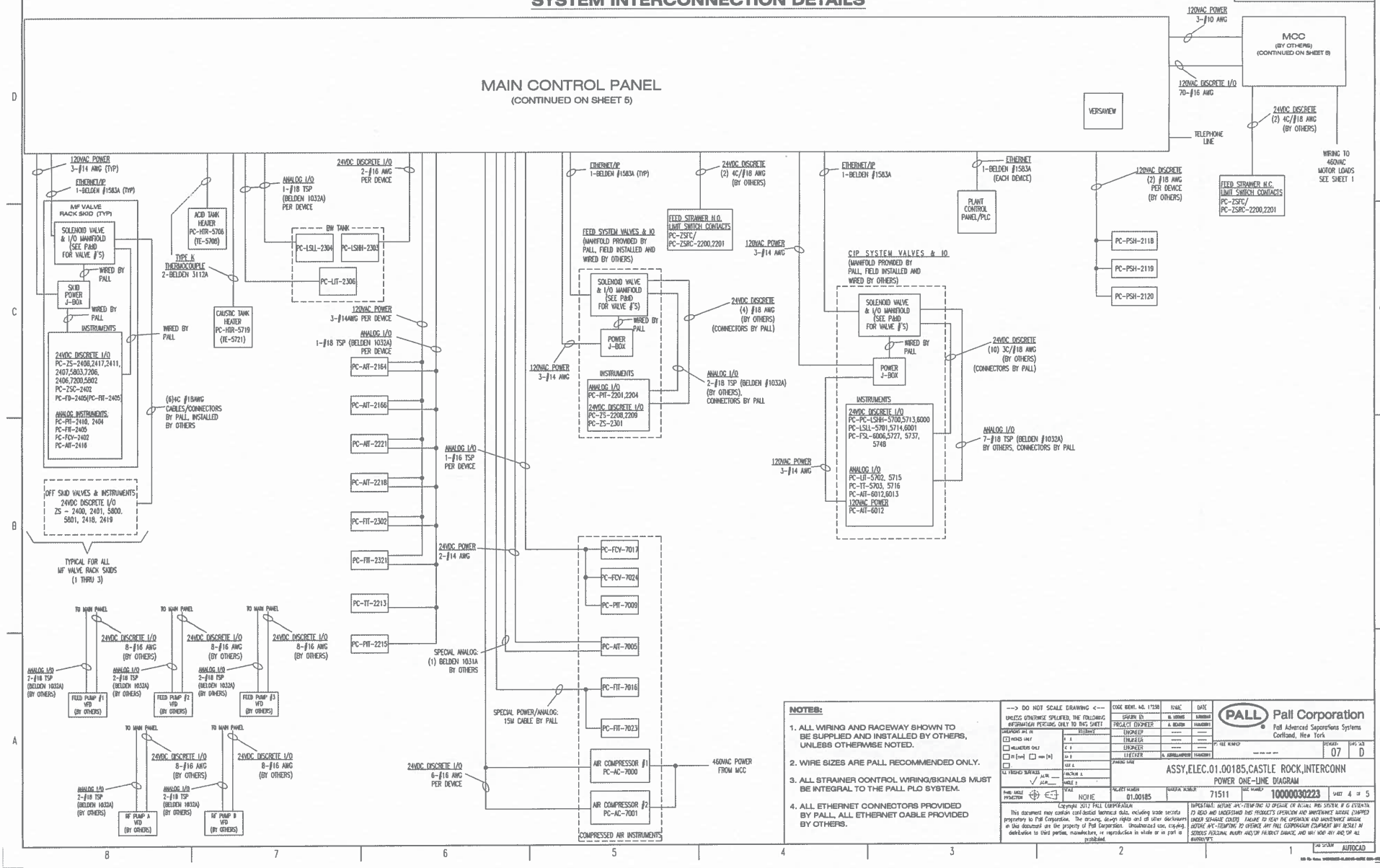

NOTES:

1. ALL WIRING AND RACEWAY SHOWN TO BE SUPPLIED AND INSTALLED BY OTHERS, UNLESS OTHERWISE NOTED.
2. WIRE SIZES ARE PALL RECOMMENDED ONLY.
3. ALL STRAINER CONTROL WIRING/SIGNALS MUST BE INTEGRAL TO THE PALL PLC SYSTEM.
4. ALL ETHERNET CONNECTORS PROVIDED BY PALL, ALL ETHERNET CABLE PROVIDED BY OTHERS.

--> DO NOT SCALE DRAWING <--
UNLESS OTHERWISE SPECIFIED, THE FOLLOWING INFORMATION PERTAINS ONLY TO THIS SHEET

CODE IDENT. NO. 17230	NAME	DATE
DRAWN BY	M. MORRIS	8/09/2011
PROJECT ENGINEER	A. BEARDS	11/08/2011
ENGINEER	----	----
ENGINEER	----	----
ENGINEER	----	----
CHECKER	A. ABRALLAHOUSE	11/08/2011

PALL Pall Corporation
Pall Advanced Separations Systems
Cortland, New York

ASSY,ELEC.01.00185,CASTLE ROCK,INTERCONN
POWER ONE-LINE DIAGRAM

SCALE: NONE
SIZE: D
SHEET NUMBER: 01.00185
DRAWING NUMBER: 71511
CAGE NUMBER: 100000030223
SHEET 4 OF 5
REVISION: 07

Copyright 2012 PALL CORPORATION
This document may contain confidential technical data, including trade secrets proprietary to Pall Corporation. The ownership, design rights and all other derivatives in this document are the property of Pall Corporation. Unauthorized use, copying, distribution to third parties, manufacture, or reproduction in whole or in part is prohibited.

IMPORTANT: BEFORE RE-TENDERING TO OPERATE OR INSTALL THIS SYSTEM IT IS ESSENTIAL TO READ AND UNDERSTAND THIS PRODUCTS OPERATION AND MAINTENANCE MANUAL SUPPLIED UNDER SEPARATE COVER. FAILURE TO READ THE OPERATION AND MAINTENANCE MANUAL BEFORE RE-TENDERING TO OPERATE ANY PALL CORPORATION EQUIPMENT MAY RESULT IN SERIOUS PERSONAL INJURY AND/OR PROPERTY DAMAGE AND MAY VOID ANY AND OR ALL WARRANTIES.

AUTOCAD

SEE SHEET 1 FOR REVISIONS

SYSTEM INTERCONNECTION DETAILS

(VALVE RACK #4 EXPANSION)

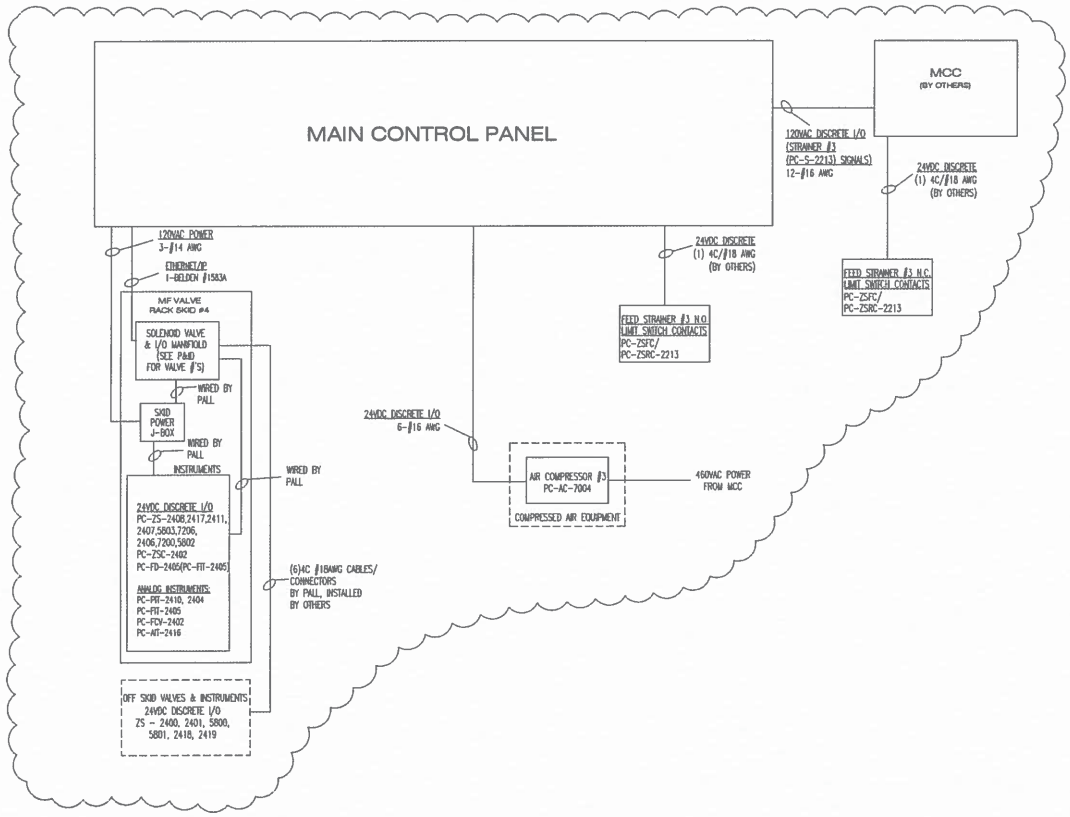

NOTES:

1. ALL WIRING AND RACEWAY SHOWN TO BE SUPPLIED AND INSTALLED BY OTHERS, UNLESS OTHERWISE NOTED.
2. WIRE SIZES ARE PALL RECOMMENDED ONLY.
3. ALL STRAINER CONTROL WIRING/SIGNALS MUST BE INTEGRAL TO THE PALL PLC SYSTEM.
4. ALL ETHERNET CONNECTORS PROVIDED BY PALL, ALL ETHERNET CABLE PROVIDED BY OTHERS.

--> DO NOT SCALE DRAWING <--

UNLESS OTHERWISE SPECIFIED, THE FOLLOWING INFORMATION PERTAINS ONLY TO THIS SHEET

DIMENSIONS ARE IN: ☑ INCHES ONLY ☐ MILLIMETERS ONLY ☐ BOTH [mm] ☐ mm [in]

ALL FINISHED SURFACES: ✓ μin. ✓ μm.

THIRD ANGLE PROJECTION

SCALE: NONE

CODE IDENT. NO. 17230	NAME	DATE
DRAWN BY	M. LOCKWOOD	11/08/2004
PROJECT ENGINEER	A. ADAMSON	11/08/2004
ENGINEER	----	----
ENGINEER	----	----
ENGINEER	----	----
CHECKER	A. ABDELLAMPOUR	11/08/2004

PALL Pall Corporation
Pall Advanced Separations Systems
Cortland, New York

PS REV NUMBER: ---- ---- ----
REVISION: 07
REV SYM: D

DRAWING NAME: ASSY,ELEC.01.00185,CASTLE ROCK,INTERCONN
POWER ONE-LINE DIAGRAM

MASTER NUMBER: 01.00185
MARKUP NUMBER: 71511
DOC NUMBER: 10000030223
SHEET 5 OF 5

Copyright 2012 PALL CORPORATION
This document may contain confidential technical data, including trade secrets proprietary to Pall Corporation. The drawing, design rights and all other disclosures in this document are the property of Pall Corporation. Unauthorized use, copying distribution to third parties, manufacture, or reproduction in whole or in part is prohibited.

IMPORTANT: BEFORE ATTEMPTING TO OPERATE OR OTHERWISE INTERACT WITH THIS SYSTEM, IT IS ESSENTIAL TO READ AND UNDERSTAND THIS PRODUCT'S OPERATION AND MAINTENANCE MANUAL (SUPPLIED UNDER SEPARATE COVER). FAILURE TO READ THE OPERATION AND MAINTENANCE MANUAL BEFORE ATTEMPTING TO UNDERTAKE ANY PALL CORPORATION EQUIPMENT MAY RESULT IN SERIOUS PERSONAL INJURY AND/OR PRODUCT DAMAGE, AND MAY VOID ANY AND/OR ALL WARRANTY.

CAD SYSTEM: AUTOCAD

Attachment B – Technical Exceptions and Clarifications

- SECTION 00 41 63 SCHEDULE OF COSTS
  Exception - Not applicable to this system expansion.

- SECTION 01 43 34 SPECIAL SERVICES
  Exception – Performance testing and training are not included in the scope of this proposal.

- SECTION 46 61 33 MEMBRANE FILTRATION EQUIPMENT FOR DRINKING WATER TREATMENT, 1.08 SCHEDULING
  Exception – schedule shall be as defined in this proposal.

- 2.06 MEMBRANE SYSTEM EQUIPMENT, Q. Extra Materials
  Clarification – Extra materials are not applicable to the system expansion and are not included in the scope of this proposal.

- 2.09 SOURCE QUALITY CONTROL, B. Factory Tests
  Clarification – since this is an expansion and not a complete system, unwitnessed Pall Standard Quality control tests in the factory have been included in the scope of this proposal. Functional testing in the field can be witnessed during commissioning and start-up.

- 3.03 FIELD QUALITY CONTROL, B 2 & 3
  Exception – Initial Performance testing and Monitored Test Period are not included in the scope of this proposal.

- 3.04 MANUFACTURER'S SERVICES
  Exception – These times are not applicable to the system expansion – Manufacturer's services are limited to that described in this proposal.

- SECTION 46 61 33.02 MEMBRANE FILTRATION EQUIPMENT FULL SCALE TESTING, 3.03 C & D
  Exception - Initial Performance testing and Monitored Test Period are not included in the scope of this proposal.

Attachment C – Commercial Exceptions and Clarifications

THE FOLLOWING CHANGES APPLY TO THE CONTRACT DOCUMENTS

GENERAL EXCEPTIONS & CHANGES TO THE CONTRACT DOCUMENTS

1. This Exceptions Document takes precedence over all other Contract Document
2. All references to Engineer and the associated responsibilities are null and void
3. Assignment clauses and document are null and void.
4. Bond clauses and documents are null and void.
5. Any schedules, effective dates, or other dates from the original contract documents are null and void.
6. The project schedule is per the Pall Proposal.

CHANGES TO THE AGREEMENT FORM 00 52 63

ARTICLE 1.05 CONTRACT TIMES

Paragraphs B. C. & D are deleted.

Paragraph E. is deleted and replaced as follows:

Liquidated Damages: Buyer and Seller recognize time is of the essence of this Agreement and that Buyer will suffer financial loss if Goods are not delivered at the Point of Destination and ready for receipt of delivery by Buyer within times specified in Seller's proposal Section 2.3 Delivery Schedule - Delivery of Membrane Rack, plus any extensions thereof allowed in accordance with Article 7 of the General Conditions. The parties also recognize timely performance of services by others involved in the Project are materially dependent upon Seller's specific compliance with requirements specified in Delivery Further, they recognize the delays, expense, and difficulties involved in proving actual loss suffered by Buyer if complete acceptable Goods are not delivered on time. Accordingly, instead of requiring such proof, Buyer and Seller agree that as liquidated damages for delay (but not as a penalty) Seller shall pay Buyer amounts as indicated in Seller's Proposal Section 2.3 Delivery Schedule:

- Submittal of documents - $500/day for late delivery
- Delivery of Membrane Rack - $1000/day for late delivery

The liquidated damages set forth in this Article 1.05 shall constitute the Buyer's sole and exclusive remedy for delay by Seller in achieving completion of the work within the time specified. Seller's obligation to pay liquidated damages pursuant to this Article shall not exceed ten percent (10%) of the Seller's contract price.

ARTICLE 1.07 PAYMENT PROCEDURES – This section is deleted along with Section 10 of the General and Supplementary Conditions. Payments are due Net 30 from Seller's invoice. Progress Payments/Payment Milestones are per Seller's proposal Section 2.4.

ARTICLE 1.10 CONTRACT DOCUMENTS

Paragraph A. is changed as follows:

Contents: The following Contract Documents are attached to this Agreement (except as expressly noted otherwise herein):

1. This Agreement, including all Attachments;
2. General Conditions;
3. Supplementary Conditions;
4. Specifications as listed in Table of Contents, as modified by Seller's proposal Sections 2.4 & 3, and Attachment B - Technical Exceptions and Clarifications.
5. Addenda
7. Exhibits to this Agreement (enumerated as follows):
   a. Seller's Proposal # 110021-08122016-02
8. The following which may be delivered or issued on or after the Effective Date of the Agreement and are not attached hereto:

a. Notice to Proceed
b. Written Amendment(s);
c. Change Order(s);
d. Field Order(s);

CHANGES TO: STANDARD GENERAL CONDITIONS FOR PROCUREMENT CONTRACTS 00 72 05 (GC), and SUPPLEMENTARY CONDITIONS 00 73 05 (SC)

ARTICLE 2
2.07 Prelim conference. Delete in its entirety.

ARTICLE 3
3.01 C. Clarifications and interpretations will be provided via the Buyer.

ARTICLE 4
4.02 Pall will provide the following endorsements to Buyer & Owner under its general liability policies, as applicable. Additional insured, Primary

ARTICLE 5
5.05 Taxes. Delete in its entirety.
5.06 Shop Drawings. Delete in its entirety. Submittals (Shop Drawings) will be per the Pall Proposal.

ARTICLE 6
6.03 Risk of Loss – Paragraph A. Change to read: Risk of loss, title, and insurable interests transfer from Seller to Buyer upon Delivery of the Goods.

ARTICLE 7
7.01 Add paragraph D. as follows. In no event will Seller be obligated to implement any changes in the scope of work until both Seller and Buyer have agreed to the changes in writing.

7.03 B. Delete the SC change and reinstate the GC terms (allowing 15 days for notification in the event delays by others affect Seller's performance)

7.03 D. Revise to read: If Seller is prevented from delivering the Goods or furnishing the Special Services within the Contract Times due to the actions or inactions of Buyer, Seller shall be entitled to an increase in the Contract Price by 1% for every month or partial month of such delay and this Contract shall be construed as if the increased Contract Price were originally inserted herein, and Buyer shall be billed by Seller on the basis of such increased Contract Price

ARTICLE 8 BUYER'S RIGHTS – Delete in its entirety and replace with the following provisions:
Inspections, Test and Final Acceptance are as designated in the technical specification as modified by the Pall Proposal.
Any rejection of Goods (of parts thereof) for being nonconforming must be made within 10 calendar days after their delivery at the place of destination by immediately notifying Seller and confirming the rejection in writing; otherwise the Goods are considered accepted.
If Buyer elects to permit the Seller to modify the Goods to correct the nonconformance, then Seller shall promptly provide a schedule for such modifications and shall make the Goods conforming within a reasonable time. Instead of requiring correction or removal and replacement of non-conforming Goods discovered either before or after final payment, Buyer may accept the non-conforming Goods and Buyer and Seller will negotiate an adjustment in the Contract Price to account for such nonconforming Goods.

ARTICLE 9 ROLE OF ENGINEER - Delete in its entirety

ARTICLE 10 PAYMENT - Delete in its entirety

ARTICLE 11
11.02 B. 2. a. Change "seven" days to "thirty" days

ARTICLE 12
12.01 A. Delete: "However, in the event the Seller is manufacturing to Buyer's design, Buyer retains all intellectual property rights in such design."

ARTICLE 14
14.04 Cumulative Remedies – Add to beginning of 1st sentence: "Except as expressly set forth herein…"

ADD ARTICLES:
14.07 No Waiver
A. No waiver by either party of any of the provisions of this Contract is effective unless explicitly set forth in writing and signed by such party. A party's failure to exercise, or to delay in exercising, any right, remedy, power or privilege arising from this Contract, or failure to insist on strict performance of the terms and conditions set forth herein shall not operate as or be construed as a waiver by such party.

14.08 No Third Party Beneficiaries

B. This Contract is for the sole benefit of the parties hereto and their respective successors and permitted assigns and nothing herein, express or implied, is intended to or shall confer upon any other person or entity any legal or equitable right, benefit or remedy of any nature whatsoever under or by reason of this Contract.